RESEARCH ARTICLE OPEN ACCESS

Development Of Gas Detection System Using Autonomous Mobile Robot

U. S. Akor[1], A.B. Yusuf[2], Peter Makanjuola O.[3] & M. Hamza[4]

[1,2,4]Department of Electrical and Electronics Engineering, Kaduna Polytechnic, Kaduna State &

[3]Department of Electrical and Electronics Engineering, Federal Polytechnic Nekede - Nigeria.

ABSTRACT

Leakage of liquefied petroleum gas (LPG) is a danger to both individuals and the environment. Gas leaks that cause fatal blazes have become such a severe problem in our homes and perhaps other areas, resulting in financial losses as well as human injuries and deaths. This project intends to create a system that detects gas leaks and warns nearby individuals by alarm and the user via SMS so that immediate action can be done to prevent a fire accident from spreading. A GSM module (SIM800L) would be used to deliver a short message service (SMS) to the subscriber when gas leakage was detected, and an obstacle avoidance robot was built for mobile services. All procedures are managed by the Arduino microcontroller.

Keywords: *Arduino, Autonomous, leakage, LPG, robot, sensor*

I INTRODUCTION

As a first step in creating an autonomous vehicle with a gas detection system, the development of an obstacle-avoiding robot model is necessary. A proximity sensor module is used by an obstacle-avoiding robot to detect obstructions. A program embedded in a microcontroller is used to control the robot. An interface module further processes the logic provided by the microcontroller. The interface module converts the microcontroller's logic into voltage and current, allowing the two motors to be driven effectively. Hobbyists have used little robots as toys, and practitioners and scientists have employed them as proof-of-concept devices. A small obstacle-avoiding robot, for example, can serve as a model for demonstrating the related obstacle-avoiding technique. While the robot itself might play an important role, consider the development of a self-driving automobile. Many obstacle-avoiding robots have been produced by various parties, one of which was described as a low-cost obstacle avoidance robot in (Hanumante et al., 2013). Designing the general robot structure, preparing the rotatory elements, and preparing the microcontroller board were all part of the design process. Preparing the interface module, preparing the proximity sensor module, planning the motion method, developing the motor rotation procedure, and designing the entire robot operating technique was done. Liquefied Petroleum Gas (LPG) is a volatile mixture of hydrocarbon gases that includes propane, butane, and propylene, among others. LPG is a fuel gas that can be found in heating appliances, cooking equipment, and automobiles. Gas leaks cause a variety of accidents, resulting in both material and human losses. Injuries to people, fire, and suffocation risks are determined by physical qualities like as toxicity and ignitability. The number of people killed by gas cylinder explosions has been rising in recent years. Substandard cylinders, obsolete valves, worn-out regulators, and a lack of knowledge in handling gas cylinders are all factors that contributed to the explosion. Because of its beneficial features, such as high calorific value, low smoke, low soot, and low environmental impact, LPG is

utilized as a fuel in a variety of applications such as houses, hostels, industries, automobiles, and vehicles. Gas leakage detection is the act of detecting potentially dangerous gas leaks using a variety of sensors (Attia and Halah, 2016). These authors employed isolated components that aren't truly invoked. Due to the intricacy of today's circuits, in today's engineering practice. Hema *et al*., (2013) suggested a WSN-based smart system for detecting LPG and flammable gases, which works in flexible ways of smart gas detection using modern approaches. Apeh *et al.,* (2014) devised kitchen gas leakage detection and automatic gas shut off system; however, this system did not include an alarm system to notify operators in either households or industries of gas leaks, thus if the shut off system fails, there is a risk of fire. For robot navigation, a variety of strategies have been employed, including fuzzy logic, evolutionary algorithms, and neural networks. Rashid *et al.,* (2010), employed a fuzzy logic-based system for indoor navigation. The author made use of a wheeled Mobile Robot (WMR) for target-tracking control; the Mobile Robot (WMR) uses a fuzzy logic framework. However, the alarm system and GSM module were not included in their navigational fuzzy logic, and WMR is stressful. Abishek *et al.,* (2013) devised a system for detecting gas leaks that was integrated with the main power supply's tripping mechanism to prevent an explosion. Transmitter and receiver modules were employed in conjunction with microcontroller programming in the designed system. The created system has been installed and tested, leading to the conclusion that the system's operation is dependent on the gas concentration in the system. The main power line is switched off and the alert sounds loudly when the gas concentration level approaches the threshold. Meteb *et al.,* (2020), developed a Novel Gas Leakage Detection System based on the Internet of Things. However, this method is not safe since sleeping people, children, and people with impaired smell sense may not identify the leakage, and bad network connectivity may render their job worthless. To improve home safety, a more robust and reliable detecting technique is required. For such an issue, this project presents a dependable, durable, and instant-response solution. The Gas Leakage Detection System (GLDS) can detect gas leaks in homes, businesses, and industries. This paper shows how to identify LPG leaks, set up an alarm system, and send a robot to patrol the regions under gas leak surveillance to prevent fires and ensure home and environmental safety. Robots are designed to eliminate the need for humans in challenging jobs or hazardous operations, as well as applications that require remote access. In-Pipe Inspection Robots and Tank Inspection Robots are two types of robotic systems (Shukla and Karki, 2016). Electronic sensors can be used to detect leaks in a pipe system. It is capable of detecting single or many pipeline leaks (Waleed et al., 2019; Bennetts *et al.,* 2014). The integration of a microcontroller is the main device employed in this paper. Gas leak detection can be programmed into microcontrollers. This can be used to detect LPG gas using a mobile phone for security purpose (Yadav *et al.,* 2016). This method is simple to use, stress-free, and secure.

II MATERIALS AND METHOD

This paper explains how the detector works to capture the gas that the sensor detects, and how the sensor is then processed in Arduino software that can show data on the LCD, generate sound, and send a short message to the registered cell phone. The scheme is depicted in figure 1 as a block diagram. It is equipped with two Arduino UNO microcontrollers. The L293D was employed with one microcontroller for robotics and the other for the LPG detecting system. D'Ausilio (2012) describes the Arduino UNO as a microcontroller board

based on the ATmega328, which has 14 digital input/output pins and 6 analog inputs (D'Ausilio, 2012). It is a powerful gadget that can be programmed, erased, and reprogrammed at any time (Badamasi, 2014). This is appropriate for a variety of robotics applications (Warren, 2011). The L293D motor shield is in charge of causing DC motors to rotate in the desired direction in order to move closer to the leakage source. The detector will be engaged and the data will be analyzed in the Arduino microcontroller if there is a leakage from the gas source. The alarm system, which consists of an LED and a buzzer, will thereafter be activated. The SIM800L GSM Module will then send the owner a notification. Gas leakage is detected by the gas sensor. When the robot approaches an area where there is a gas leak, the detector, which is comprised of the MQ-5 gas sensor, identifies a gas leak and engages the alarm system, the device, which consists of a buzzer, will then send a Short Messaging Service (SMS) to the registered mobile number in order to alert the owner or industrial employees to take immediate action to avoid damages.

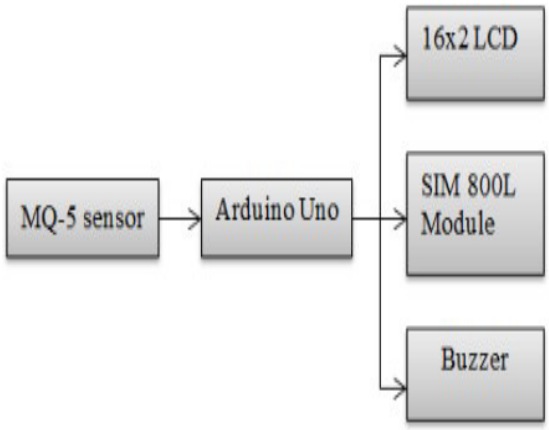

Fig.1. Block diagram of gas leakage detection system

Microcontroller Arduino

Arduino is an open electronics prototyping platform based on adaptable, user-friendly hardware and software. Arduino is capable of perceiving the environment by receiving input signals from various sensors and controlling various actions as a result. The Arduino programming language and the Arduino development environment are used to program the microcontroller on the Arduino board. MQ-5 LPG Sensor: This Arduino receives information from the gas sensor, MQ-5.

MQ-5 LPG Sensor

This is an excellent sensor for detecting dangerous LPG leaks in homes, workplaces, storage equipment, and vehicles that use LPG as a fuel. This portion is simple to integrate into an alarm circuit, initiate an alarm tone, or even display a graphic representation of the gas concentration. This sensor has a high sensitivity as well as a quick reaction time. When input gas is present, the sensor's conductivity increases, and the concentration rises with it.

The MQ-5 gas sensor was chosen because of its capacity to detect a variety of gases. Tin/stannic is the sensitive substance utilized in the MQ-5 gas sensor. Tin/Stannic oxide (SnO2), which has lower conductivity in a clean air medium, when the target LPG leak is detected, the sensor's conductivity rises and increases proportionately as the extent of gas leakage increases.

SIM800L GSM Module

The SIM800L GSM module is used to deliver real data from the system to a SIM card connected to a GSM network. This module can be used in conjunction with

Arduino to make it easier for users to construct SMS-related programs.

Buzzer

The program will not only convey data in the form of short messages or SMS, but it will also play a sound. The Buzzer is the source of this information.

A buzzer is a device that, when activated, can make a sound. The buzzer is used as a marker in this series to indicate what will sound when the gas leak detection detects a leak.

Display Type: Liquid Crystal Display (LCD)

The LCD (Liquid Crystal Display) screen is a type of electronic display that uses liquid crystals to display information. It can be used in a variety of situations in digital applications. The common module, a 16x2

LCD display, is widely utilized in numerous electronic circuits and gadgets. In comparison to seven-segment and other multi-segment displays, LCD modules are most commonly used. This is due to the LCD's low cost and ease of programming. It has no limits when it comes to showing unique and personalized characters, animations, and much more. The term 16x2 LCD refers to a display that can display 16 characters per line on two lines. Each character is represented by a 5x7 pixel matrix.

Implementation of Software

Figure 2 depicts the flow chart of the proposed software system's implementation.

The MQ-5 gas sensor is used to monitor the gas in this system. When a gas is detected, the signal from the sensors falls low, triggering the Arduino UNO. The LCD ("GAS Discovered AT ZONE"), where the robotic LPG detector is located, transmits signals to the Buzzer and GSM, which informs people to the danger, and if no gas is detected, the LCD displays "NO GAS DETECTED" in its 16x2 display.

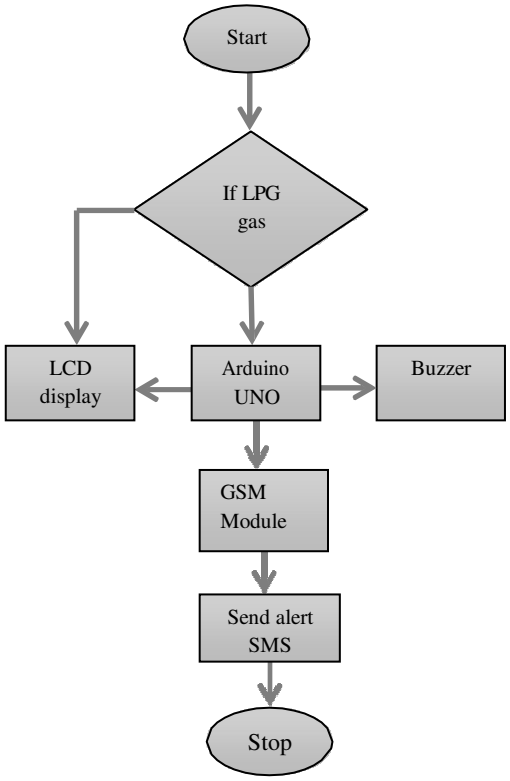

Fig.2. Flow Chart of the LPG leakage detector syste

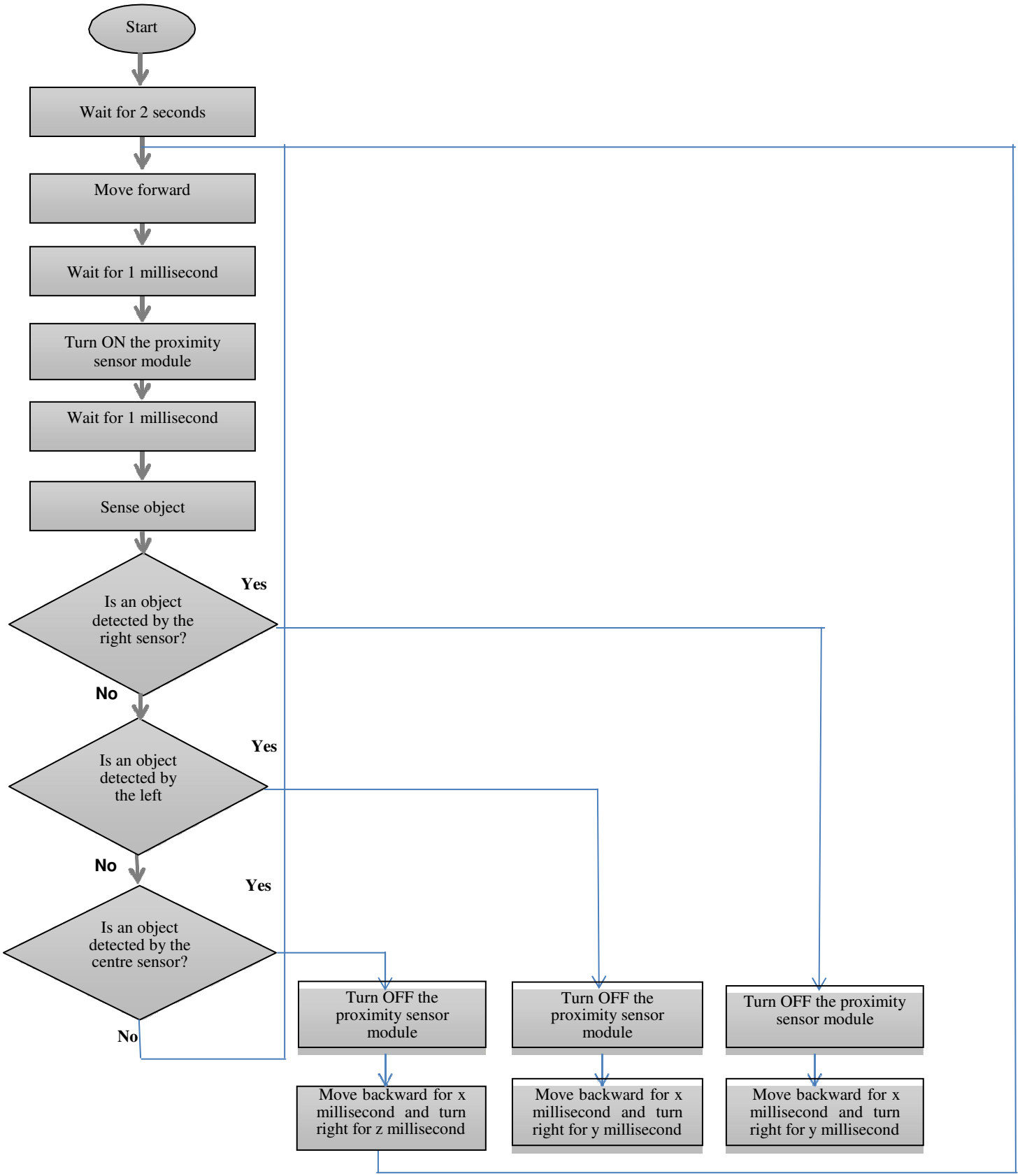

Fig.3 Procedure of robot operation shown in a flow chart

The operation is initiated when the power supply is ON and ON/OFF switch is pushed. The 2 second delay gives a chance for operator to put the robot on the floor. The value of x, y and z are changeable and should be set in a way so that the robot turning motion is suitable for the size of pathway. To be noticed that z > y. The obstacle avoiding pattern works as follows: (1) If no obstacle is detected, the robot will keep moving forward, (2) If an obstacle in right front is detected, the robot will move backward for a while then turn left for a while then move forward, (3) If an obstacle in left front is detected, the robot will move backward for a while then turn right for a while then move forward, (4) If an object in the front is detected, the robot will move backward for a while then turn right for a bit longer then move forward.

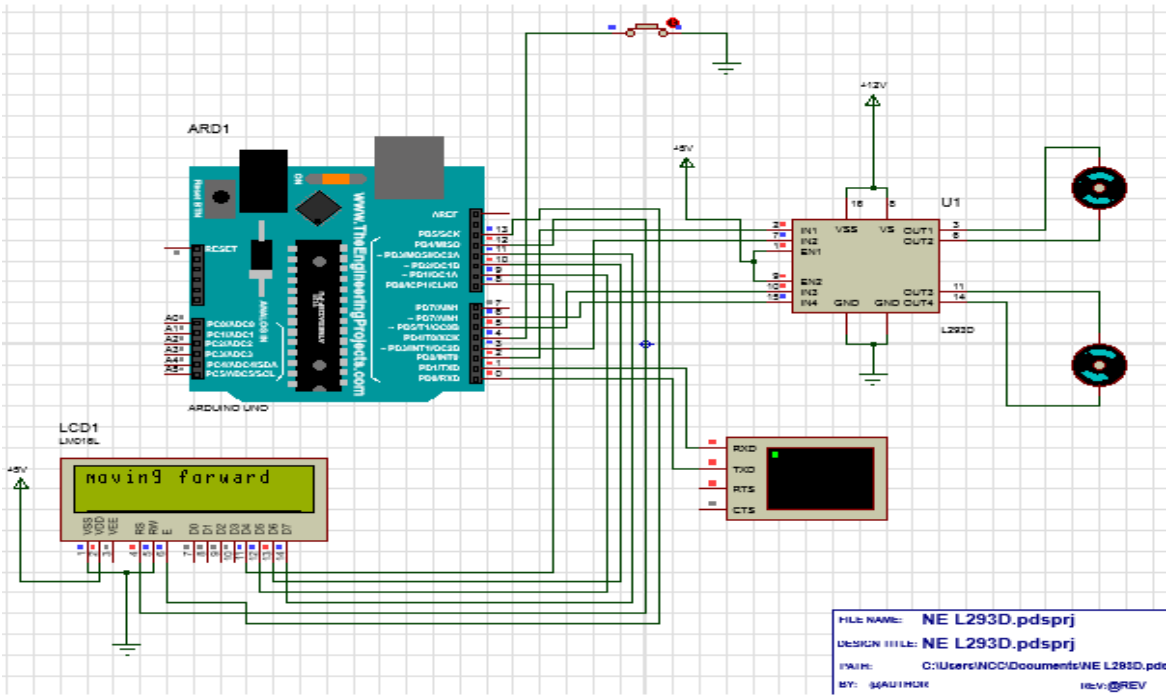

Fig. 4. L293D motor driver and Arduino used for autonomous robotic application

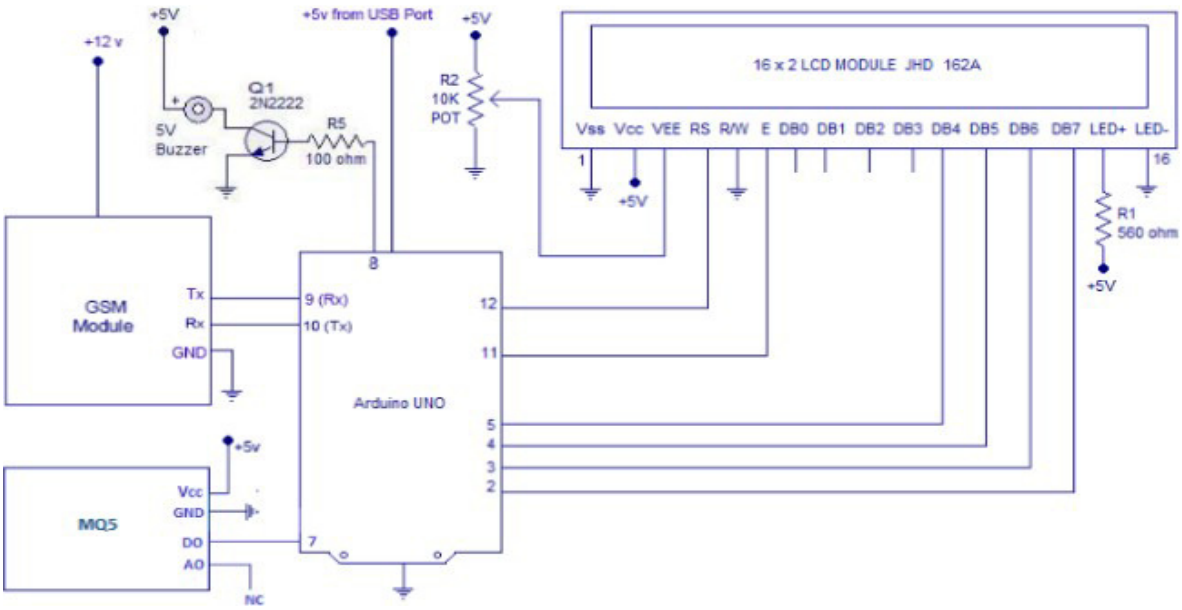

Fig.5. Circuit diagram of LPG detection system

III RESULTS AND DISCUSSION

The leakage system's prototype was tested by sensing a minimal quantity of LPG, methane, and carbon monoxide gas near the sensor. Methane, LPG, and carbon monoxide gas are detected by the MQ-5 gas sensor, which sends a signal to the microcontroller, which then transmits an active signal to other externally connected devices. As a result, the names of identified gases will appear on LCD panels. The system refreshes itself when the reset button is hit, and the entire system returns to its original position. The L239D motor driver was employed to provide robotic movement for the detector in order for it to move inside the needed surveillance space.

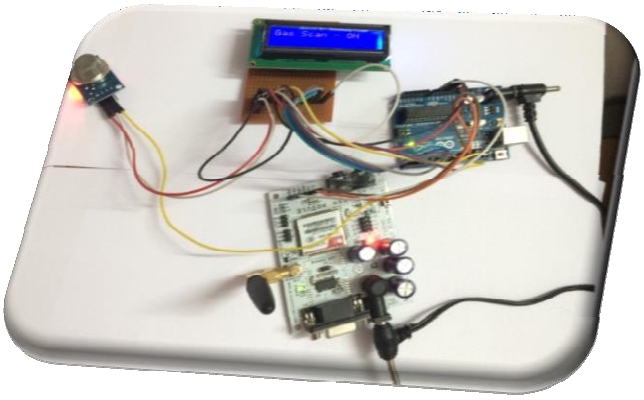

Fig. 6. Prototype of the proposed system

Fig. 7. SMS display of the LPG leakage detector

Fig. 8. Prototype of autonomous mobile robot

The system operates in the following way: when the system is turned on, this tool will immediately detect the gas content, using a sensor designed to detect LPG gas, the MQ-5 gas sensor. The sensor then processes or converts each LPG gas level it detects into an analog signal. The analog signal will then be delivered directly to Arduino by the MQ-5 sensor. The analog signal to be delivered represents a number of LPG gas levels measured by the MQ-5 sensor. This analog signal will then be used as Arduino functioning parameter in the future. Is the gas level above or below the limit? If the amount of LPG received by Arduino exceeds the set limit of 5000, ppm (part per million), then the Arduino will directly control the other connected ones, namely relay, buzzer, and SIM800L. By sending commands to the GSM Module and the buzzer that warns danger, the Arduino will directly operate the other connected devices, such as the relay, buzzer, and SIM800L. The buzzer is then activated, and an alarm signal is given as a marker in the form of sirens, indicating that a leak of LPG gas has surpassed a preset limit. Finally, Arduino will tell the SIM800L module to send an SMS message to the owner informing them of the leak.

IV CONCLUSION

Gas leakages cause serious mishaps that result in property damage and human injuries.

The main causes of gas leakage are poor equipment maintenance and unawareness. As a result, detecting LPG leaks is critical for avoiding accidents and saving property and human lives.

The detection of LPG leaks was discussed in this work. Using an autonomous robot as a warning system, the Arduino UNO was used for both robotics and the system's overall process management. When LPG leakage is detected, this system sounds a buzzer and sends an SMS to the registered number. This approach is straightforward but dependable. This system has remarkable leakage detection ability; it may be used for both

industrial and domestic needs. We can use this technique to save lives in perilous situations. The GSM module sends out a warning. Gases such as CO2, oxygen, and propane are detected by a sensor node. The sensor was built using simple techniques and an Arduino UNO Microcontroller. In this study, a cost-effective gas leakage detection system based on autonomous vehicles was conceived, constructed, and successfully executed as a laboratory prototype. The system was tested in the field with a butane-based lighter, which is a component of LPG.

The prototype's efficiency is confirmed by the test results, which show that it detects low and high gas leakage levels and informs users with suitable audiovisual warning signs. In terms of gas leakage detection in residential and commercial buildings, the suggested system is designed to meet Nigerian occupational health and safety regulations.

The cost of developing the system is quite inexpensive, and it is substantially less than the cost of commercially available gas detectors.

REFERENCES

[1] Abishek, V. and Aierselvam, V. (2013). Wireless Auto Power Trip during Gas Leakage, *Advance in Electronic and Electric Engineering*, 3(3):327-332.

[2] Apeh, S. T., Erameh, K.B and Iruansi, U. (2014). Design and Development of Kitchen Gas Leakage Detection and Automatic Gas Shut off System. *Journal of Emerging Trends in Engineering and Applied Sciences*, 5(3):222-228.

[3] Attia, H. A. and Halah, Y. A. (2016). Electronic Design of Liquefied Petroleum Gas Leakage Monitoring, Alarm, and Protection System Based on Discrete Components. *International Journal of Applied Engineering Research,* 11 (19): 9721-9726.

[4] Badamasi, Y.A. (2014). The Working Principle of Arduino, *2014 IEEE*, pp.1-4.https://doi.org/10.1109/ICECCO.2014.6997578.

[5] Bennetts, V.H., Schaffernicht, E., Stoyanov, T. A. J., Lilienthal, T.A.J., and Trincavelli, M. (2014). Robot assisted gas tomography - localizing methane leaks in outdoor environments, *Proceedings of IEEE International Conference on Robotics/ and Automation (ICRA).* Pp.6362-6367. Retrieved from: https://doi.org/10.1109/ICRA.2014.6907798 on 29th November, 2021.

[6] D'Ausilio, A. (2012). Arduino: A low-cost multipurpose lab equipment, *Behavior Research Methods,* 44(2):305-13.

[7]Hanumante, V., Roy, S.,and Maity, S. (2013). "Low Cost Obstacle Avoidance Robot", *International Journal of Soft Computing and Engineering (IJSCE)*, 3(4): 52-55.

[8] Hema, L. K., Murugan, D., and Chitra, M. (2013). WSN based Smart system for detection of LPG and Combustible gases. In National Conference on Architecture, Software systems and Green computing. *Journal of Emerging*

Trends in Engineering and Applied Sciences, ISSSN 2278-6856.

[9] Meteb, A., Alaa, M., Ruba, A., Taghreed, A., and Wejdan, A. (2020). New Gas Leakage Detection System using Internet of Things. *SSRG International Journal of Computer Science and Engineering (SSRG-IJCSE),* 7(7):2348 – 8387.

[10] Rashid, R., Elamvazuthi, I., Begam, M. and Arrofiq M. (2010). Differential drive wheeled Mobile Robot (WMR) control using fuzzy logic techniques in mathematical/analytical modeling and computer simulation (AMS), 2010, *4th Asia International Conference*, pp.51-55.

[11] Shukla A. and Karki, H. (2016).Application of robotics in onshore oil and gas industry-A review Part I. *Robotics and Autonomous Systems*, 75(2016):490–507. Retrieved from:https://doi.org/10.1016/j.robot.2015.09.012 on 2nd December, 2021.

[12] Waleed, D., Syed, H. M., Shayok M., Mamoun, F. A., Mohammad, A. K. J., Kevin, R. D., Fahad A. and Jawwad, I. A. (2019). An In-Pipe Leak Detection Robot with a Neural-Network-Based Leak Verification System," *IEEE Sens. J.*(19)3:1153-1165.Retrievedfrom:https://doi.org/101109/JSEN.2018.2879248 on 30th November, 2021.

[13] Warren, J.D., Adams, J. Molle, H. Adams, J. and Molle, H. (2011). Arduino for Robotics, pp. 51–82. https://doi.org/10.1007/978-1-4302-3184-42.

[14] Yadav, V., Shukla, A., Bandra, S., Kumar V., Ansari U. and Khanna, S. (2016). A Review on Microcontroller based LPG Gas Leakage Detector. *Journal of VLSI Design and Signal Processing,* 2(3):1-10.

