REVIEW ARTICLE OPEN ACCESS

Prevention of Hydrate formation in Subsea wells Using Methanol injection

(A Case Study of a Niger Delta Field)

Okewinike Thompson[1], Wami Emenike[2], Ehirim Emmanuel[3]

[1]Petroleum Engineering, Rivers State University, Port Harcourt, Nigeria

[2,3]Chemical/Petrochemical Engineering,Rivers State University, PortHarcourt, Rivers State.

ABSTRACT

This study examined and illustrated the injection of methanol as an hydrate prevention technique in Deepwater operation and production. Hydrates known to be one of the hard to control factors in the oil production sector of petroleum engineering, cause serious operational and safety problems to oil and gas industry. Hydrates can plug gas pipelines, wellbore and processing units leading to production loss, pipelines rupture and explosion. Many chemicals injected to gas pipeline to decrease hydrate formation temperature and prevent hydrate formation are thermodynamic hydrate inhibitors (THIs) such as mono-ethylene glycol and some vital alcohols. This work presents a a simulation study to detect the effect of methanol on gas hydrates formation at various pressures and temperatures. Methanol, as an inhibitor to hydrate formation medium was studied with respect to a temperature of 45°C and pressure effects of 3.450 e +004 kpa via simulation with two running streams, stream1 running at the flow rate of 3.172 kgmol/hr cof the gas composition. and stream2 containing 100moles, of methanol, with total volume of 1.5m^3 for the wells and 1.8m^3 for manifold. Both streams were fed into a mixer through the separator to the distillation reflux column where the various gases were separated. The field data and the fluid composition were run in Aspen HYSYS. The results show that hydrate inhibition was improved by using methanol at 45°C and 345bar, and within 160°C to 162.5^{o}C of column operating conditions along the 7th tray. with no hydrate formation. The effectiveness of methanol as an inhibitor was enhanced by high temperature and low pressure in the subsea production system.

Key Words: Prevention, Hydrate Formation, Subsea wells, Methanol, injection

1.0 Introduction

Hydrate are ice-like solids, mixture of water and low molecular weight hydrocarbons forms when free water and low molecular weight gas combines and with t high pressure and low temperature present according to Holder and Angert (1982). Hydrate formation as at today in oil and gas industry is one of serious economic and safety problems in the petroleum industry during exploration production, processing and transportation of crude oil and natural gas from the findings of Hammerschmidst (1934). Pipeline's processing facilities and transportation system can be blocked by hydrate thus the blockage can reduce and stop the fluid flow. According to Bassey (2015), it means hydrate blockage can cause loss of production and operational shutdown. Claussen and Muller (1951) in a related study explains that precise knowledge of phase behavior in hydrocarbon and hydrate system, or water hydrocarbon system, especially in the occurrence of salt and organic inhibitor is very important to design and operate oil and gas pipeline production and processing facilities.Mohammadi and Tohid (2008) in his study on deep water operations state that we have the production system which begins from the subsea were the mixture of oil and gas from the reservoir are

transported across series of pipe bends has the inherent risk of experiencing cooling down of temperature as fluid travels across bends, and in each cases there is a relative drop in pressure and temperature which affects the average velocity of the fluid flow, and the drop in the fluid velocity generally gives rise to formation of high viscous mixture Gas hydrates are crystalline compound that can be formed at moderate pressure more than 10 bar and temperature less than 20°C. In the presence of water and small molecules such as methane (C_1) ethane (C_2), propane (C_3) carbon dioxide (CO_2), and hydrogen sulfide (H_2S). These conditions cause the risk of pipelines blockages as production move to colder temperature and higher pressure in subsea environment. Leffler et al (2011) in His study on Deepwater productions observed thatflow assurance is the analysis of the whole of production system from upstream to downstream to ensure that fluids will continue to flow over the life of the field. In the other words, Deepwater or subsea production depend heavily on flow assurance to ensure that the large capital investment put in place is recovered at considerable time frame.Arnold. (2008) from his experiment on the design of surface production operation in oil and gas handling concludes that due to difficulty of oil and gas transport and processing in deep water or subsea, this research is important to predict the hydrate formation in subsea pipeline production and the best remediation practice that befits, industry practices. Reyna and Steward (2001) in his findings states that deep water oil and gas exploration has increased significantly in recent years, with forecasts predicting that trend will continue despite the dwindling oil prices. Because of the high capital and operating expenditures inherent in these developments, it is economically favorable to develop satellites fields with subsea completions.Bassey. (2015) in his studies on deep water hydrate prevention mechanism concluded that Subsea wells are wells located on the Deepwater where the depth of the water ranges from 100meter to 1700meters floor, as opposed to at the surface. as in the case well XY Deepwaterwhich is the case study, the crude oil is drilled with the aid of high profiled drilling rigs and transported to the Topside installations for further reprocessing, deep-water well is usually drilled by a moveable rig, and completed then the produced oil is transported by riser and by undersea pipeline to a nearby production platform. This allows one strategically placed production platform to service many wells over a reasonably large area. Subsea systems are typically in use at depths of 7,000 ft or more. According to Barker et al (1989) Subsea systems comprise of the well system (includes the down hole completion system and the subsea tree), the production system and the pipeline system made up of, umbilical's, risers, injection pipelines, and production pipelines.Barker and Gomez (1989) expanded his investigation on subsea production system (FPS), as he explains that there are many deep reservoir wells which are mainly wells located on the sea floor in shallow on the deep-water installation helps to produce petroleum to the surface facility. The system ranges from a single subsea well producing to a nearby platform and pipeline system to a distant production facility. These systems are being applied in water depths of at least 1500m to 1700m or more. Subsea developments have been made possible by technologies such as subsea trees, risers, and umbilical lines. The production equipment is located on the seafloor rather than on a fixed or floating platform, subsea processing provides a less-expensive solution for myriad offshore environments. Originally conceived to overcome the challenges of extremely Deepwater situations, subsea processing has become a viable solution for fields located in harsh conditions where processing equipment on the water's surface might be at risk, according to Speight, (2015).Van der Waals and Platteeuw (1954) were first scientists to calculate the conditions of hydrate formation. Bassey (2015) from a related study in production operation discovered that hydrate formation was normally detected by observing a change in the differential pressure across the flow valves. But it is more significant to know that so operational shutdown which last for extended period due to the inability to restore production on stream can lead to cool down of temperature which can lead to the drop in the temperature; this has the potential to form ice like molecules. Sloan (2004) concluded that Hydrates occur in the liquid-water phase in equilibrium with a hydrocarbon phase. This means that hydrocarbon phase components are in solution in liquid-water phase. Accordingto

Boxall et al (2008), in the petroleum industry, there are four clathrate hydrate technological areas. Billy and Dick (1974) put it clear that Hydrate formation is accelerated by agitation such as high velocities or other turbulence, pressure pulsations, seed hydrate crystals and amore suitable site for crystal formation, such as pipes restrictions, orifice plates, scale, and solid corrosion products,Katz (1945) on a work on hydrate state that hydrate can also form when only gas and water are present in dynamic conditions, although a very short delay in hydrate formation is to be expected, the rate of hydrate formation will remain very weak: consequently, it can be longer to form a hydrate plug fluid difficult. This work will evaluate the effectiveness of methanol injection in subsea wells to prevent hydrate formation.

2.0 Materials and method

2.1 Materials

The following materials were used during the study.

i) Methanol with 22% concentration and 98% of purity.
ii) Subsea methanol injection pump with discharge pressure of 300 bar, online filter for filtration of methanol.
iii) Methanol pressurization pump A/B one on duty and one on standby.
iv) Data obtained from field XY FPSO oil producing well connected with online pressure and temperature indicators connected to the central control room, subsea well head, Tubing and well jumpers, located at 200 km South East of Niger Delta. The FPSO is a 320m long, 60 meters widespread moored stand alone with a hull height is 30.5 meters and the water depth are 1150 meters – 1750 meters
v) Aspen HYSYS software version 8.8, a process simulating tool to identify the hydrate formation condition and the possible location for hydrate formation.
vi) Oil and Gas production Handbook

2.2 Simulational approach

In the study on the preservation by methanol injection there are two correlations considered for the computation of the methanol required to inhibit the volume of water produced alongside the oil. The two-correlation used are that of Hammer Schmidt and Nielsen-Bucklin.

Firstly: Hammer Schmidt correlation state as follows:

(MeOH weight/water weight) = w/MeOH (3.1)

But Nielsen- Bucklin simplified it further as follows

(MeOH weight /water weight) = w/MeOH = (3.2)

Where:

MW = is the molecular weight of the methanol (32g/mol)

= Is the temperature difference in degree between the hydrate formation under the operating pressure and the fluid temperature

The volume of methanol used for the injection is as follows:

$$M = \frac{w^{o}/o\ MeOH * Q_{water}}{C_{i} - w^{o}/o MeOH} \quad (3.3)$$

Were

Q_{water}= water flow rate

C_i= the purity of the methanol =98%

Methanol loss in the vapor phase was also considered since there is possibly of loss during the injection process. Lvp (kg/h) are accounted for in the methanol flow rate requirement, which is given as:

Lvp = c(MeOH/gas) * Qgas *w%MeOH (3.4)

(MeOH) is the concentration of methanol dissolved in the gas phase. It depends on the temperature and the pressure of the fluid.

Qgas = is the gas flowrate (MSm^3/d).

Methanol losses in the oil phase Lop (kgh) are to be accounted in the methanol flow rate requirement. which is given as follows:

$Lop = Qop * P_{oil} * / S_{MeOH} * M_{MeOH(}3.5)$

M_{oil}

Q oil is the oil flow rate (blp)

P is the oil density at the pressure and the temperature considered (kg/m^3)

MeOH is the methanol solubility

MeOH is 32g/mol

M_{oil} depends on the pressure and the temperature of the production fluid (100g/mol)

Procedure for Methanol Injection during the Preservation of Well Tubing:

i. Well flowing and production ongoing for well X producing 13000bbp/d
ii. Gas production rate is 11mmscfd
iii. Water production is 100b/d
iv. Monitor the flowing well head pressure and Temperature and record the value.
v. Ensure the lower master valve was kept open to enable tubing preservation with methanol
vi. Also ensure the upper master valve (SSV) is kept in open position
vii. Start command was given to the methanol preservation pump Gx 350, to build up the pressure to 8 bar and discharge into the suction for injection pump
viii. The subsea methanol injection pump was started to build the pressure to 300bar which supply methanol to the subsea well head.
ix. Open methanol injection valve MIV 1 to supply methanol to the tubing at the rate of $1.5m^3$

-Record of the Start time - 11h20
- Record of the Stop Time - 10h35
-The discharge pressure of the pump is at 300bar.
- Close the Production wing valve and keep it closed

x. The well was kept closed for the period of intervention.
xi. The initial pressure and temperature were taken and at the end of treatment final
xii. Monitor the suction and discharge pressure of the pump for the pump efficiency

-Discharge pressure – 300bar
-Suction pressure - 8 bar
- Total volume injected is $1.8m^3$

Methanol injection for the preservation of well tubing is shown is shown in Figure 1.

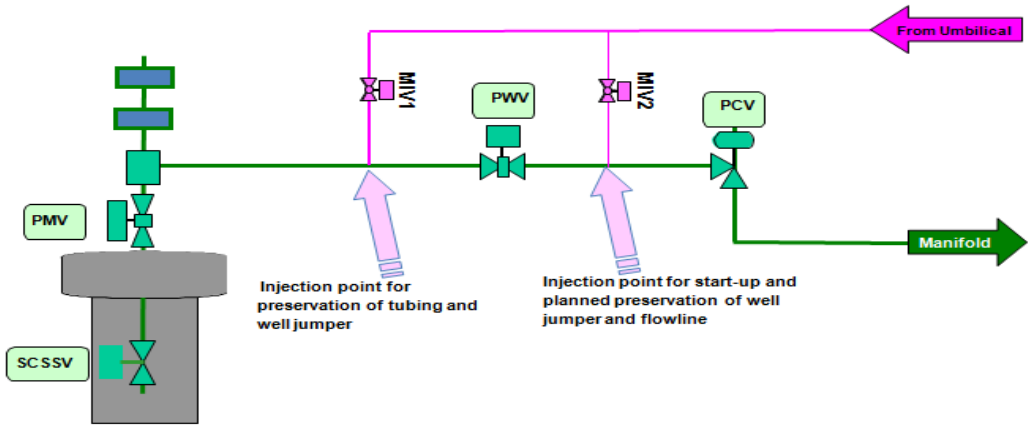

Figure 1. Showing the configuration of methanol injection in the deepwater installation

2.3 Assumptions for the HYSYS Simulation Model

i. Perfect mixing is carried out by the mixers
ii. Perfect vapor-liquid separation of return material from the separator, in the column
iii. The process is operated at steady
iv. The mechanical energy terms of equipment used is negligible
v. The equipment's are well lagged to prevent heat losses
vi. The effect of change in total molar flow rate is ignored.

Simulation is the use of computational software's to solve mathematical models and to analyze the performances of a model or chemical process in order to find essential unknowns about a process. It is in this view that aspen HYSYS is used as the base computer software in solving the fluid operative models since it contains a variety of time-tested algorithms known as equation of states e.g the Peng-Rohbinson, which are useful and often very effective in solving the system of equations, quickly and accurately. However, in using aspen HYSYS computational software, the user must be wary of certain parameters which are used as inputs into the simulation as wrong inputs will automatically yield wrong results.

2.4 Inhibition Simulation Process Description

The simulation process for the inhibition of hydrate formation in jumpers, head, pipes and valves caring crude and natural gas and using methanol as the thermodynamic fluid can be best described as follows. In the well head process, wet natural gas [temperature at 45°C, pressure of 34500kpa and a flow rate of 3.171994kgmol/h] as a single stream running from the well head is first sent into a mixer with a stream of ethanol [temperature at 223°C, pressure of 2321kpa and a flow rate of 332kgmol/h] through the inlet of a mixer [MIX-100] to be properly mixed to form a homogeneous mixture, then after they unique mixture is been sent through the chiller to reduce the mixed outlet temperature before it is been flashed in an inlet separator [V-100] to remove liquid and solid content of the mixture as separate streams for the upper [head flow] and lower [Butt out] outlets of the separator. The head flow which is mainly made up of the gases which are the studied focus section of the mixture are been redirected into a Condenser – Reboiler distillation column [T - 100] to operating with the process condition of the column as; Condenser and Reboiler pressure of 252psia and 248psia respectively, reflux ratio 6.0, using 12 trays and a vapor

overhead product flow of 500kgmol/h with all the components of the natural gas used in their various mole fractions as described at the table above

3.0 Results

3.1 Process Convergence

The injection of methanol into the production systemfocused mainly to promote theinhibition or the deformation of hydrate in the well head and thereby shifting the hydrate formation curve to the right. This process was carried out by running two streams of feeds into a mixer(MIX-100) where the streams where homogeneously mixed to form a single run line, which the a valve was connected to the mixer and when turned open the stream was now sent by a pump through a chiller to a unit separator operating at 221.1^{o}C and 2321kpa pressure, then the second pulm operating at considerate pressure now pumped the overheard stream of the separator into a reflux operating fractionators, the reason why the overhead content was the one sent into the fractionators is because the overhead product of the separator tends by simulation analysis to be more concentrated with hydrocarbons due that majorly the compositions that were set for testing where majorly gases, hence they of lower molecular weight so their concentration will majorly flow through the overhead line of the separator while the bottom line will content majorly heavy molecular weight liquids that might of condensed in the vertical separator. The fractionator used in this process is a 12tray fractionators with a reflux of 6.0 operating at total reflux conditions with a reboiler and condenser pressure of 248psia and 252psia respectively, and using an overhead flow operation of 226 Ibmol/hrthe process converged after some certain operational iterations yielding process flow diagrams, tabulated data and plots satisfactory to the research objectives with cognizant to the nature of the stream composition and mole ratios used in the process using Peng Robinson as the process FPKg. The process flow diagram is presented in figure 2

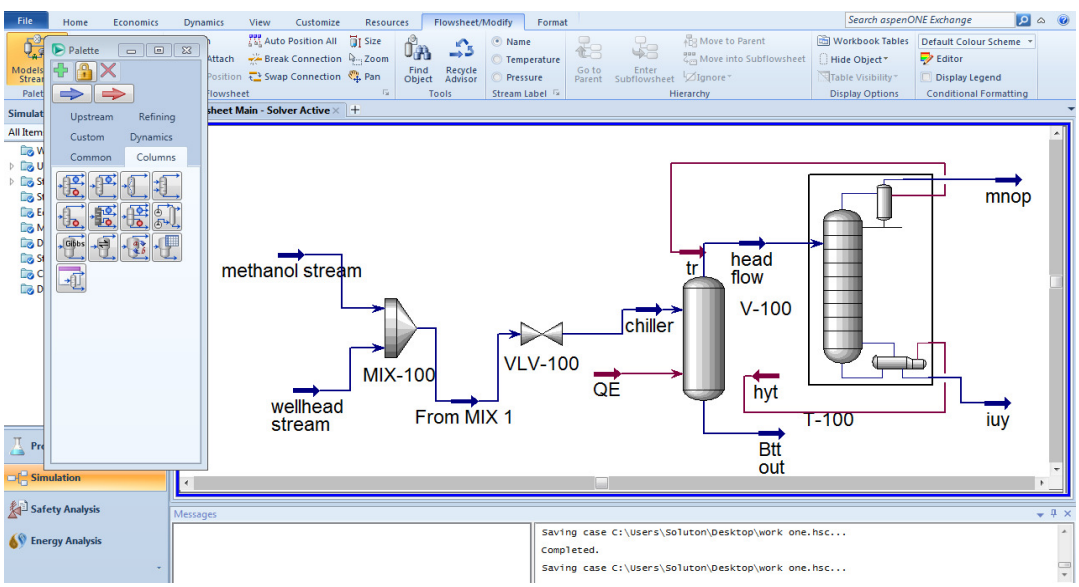

Figure 2. Showing the process flow diagram is shown

The process convergency data is shown in figure 3

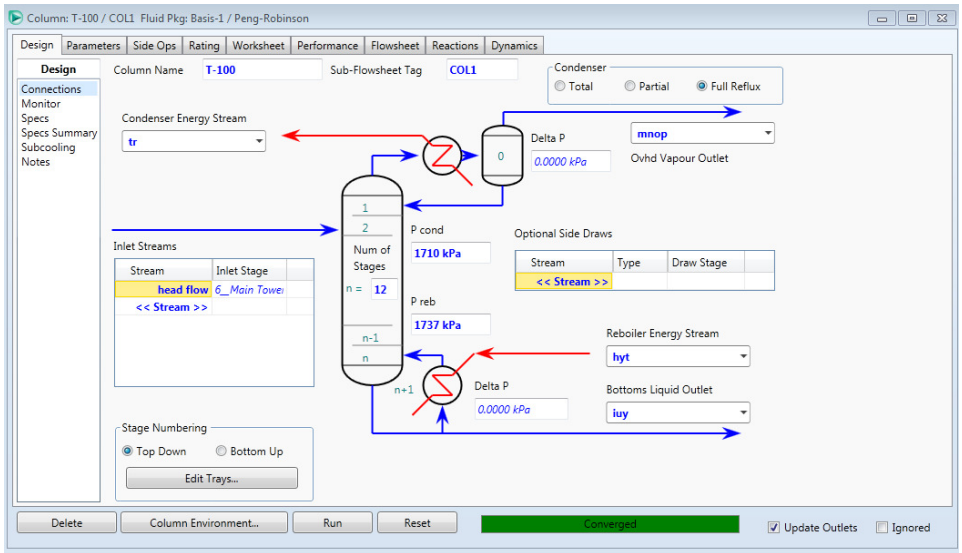

Process Convergency Data

Figure 3. Showing the process convergency data for the simulation run

Figure 4 shows the process convergency data for the simulation run are presented as the simulation convergencyas indicated in Figure **Result of Analysis**

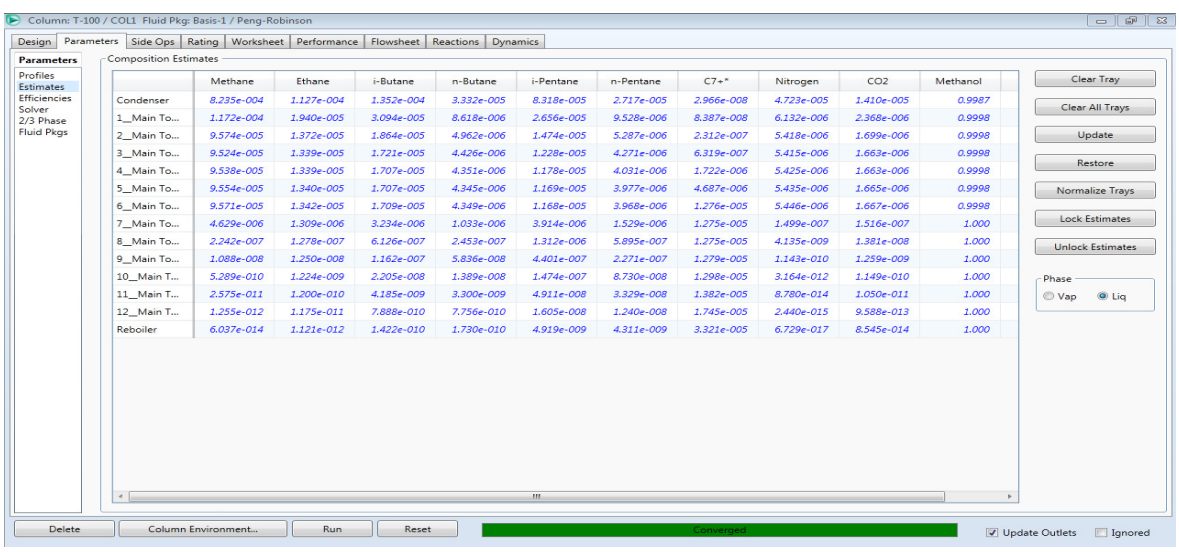

	Methane	Ethane	i-Butane	n-Butane	i-Pentane	n-Pentane	C7+*	Nitrogen	CO2	Methanol
Condenser	8.235e-004	1.127e-004	1.352e-004	3.332e-005	8.318e-005	2.717e-005	2.966e-008	4.723e-005	1.410e-005	0.9987
1__Main To...	1.172e-004	1.940e-005	3.094e-005	8.618e-006	2.656e-005	9.528e-006	8.387e-008	6.132e-006	2.368e-006	0.9998
2__Main To...	9.574e-005	1.372e-005	1.864e-005	4.962e-006	1.474e-005	5.287e-006	2.312e-007	5.418e-006	1.699e-006	0.9998
3__Main To...	9.524e-005	1.339e-005	1.721e-005	4.426e-006	1.228e-005	4.271e-006	6.319e-007	5.415e-006	1.663e-006	0.9998
4__Main To...	9.538e-005	1.339e-005	1.707e-005	4.351e-006	1.178e-005	4.031e-006	1.722e-006	5.425e-006	1.663e-006	0.9998
5__Main To...	9.554e-005	1.340e-005	1.707e-005	4.345e-006	1.169e-005	3.977e-006	4.687e-006	5.435e-006	1.665e-006	0.9998
6__Main To...	9.571e-005	1.342e-005	1.709e-005	4.349e-006	1.168e-005	3.968e-006	1.276e-005	5.446e-006	1.667e-006	0.9998
7__Main To...	4.629e-006	1.309e-006	3.234e-006	1.033e-006	3.914e-006	1.529e-006	1.275e-005	1.499e-007	1.516e-007	1.000
8__Main To...	2.242e-007	1.278e-007	6.126e-007	2.453e-007	1.312e-006	5.895e-007	1.275e-005	4.135e-009	1.381e-008	1.000
9__Main To...	1.088e-008	1.250e-008	1.162e-007	5.836e-008	4.401e-007	2.271e-007	1.279e-005	1.143e-010	1.259e-009	1.000
10__Main T...	5.289e-010	1.224e-009	2.205e-008	1.389e-008	1.474e-007	8.730e-008	1.298e-005	3.164e-012	1.149e-010	1.000
11__Main T...	2.575e-011	1.200e-010	4.185e-009	3.300e-009	4.911e-008	3.329e-008	1.382e-005	8.780e-014	1.050e-011	1.000
12__Main T...	1.255e-012	1.175e-011	7.888e-010	7.756e-010	1.605e-008	1.240e-008	1.745e-005	2.440e-015	9.588e-013	1.000
Reboiler	6.037e-014	1.121e-012	1.422e-010	1.730e-010	4.919e-009	4.311e-009	3.321e-005	6.729e-017	8.545e-014	1.000

Figure 4. Showing results of the process run

After the successful convergency of the process, the following plots were obtained from the simulation and expiations validating the chemical interactions of the methanol stream and that of the wellhead stream gasses uniquely stated below as follows:

After the successful convergency of the process, the following plots were obtained from the simulation and expiations validating the chemical interactions of the methanol stream and that of the wellhead stream gasses uniquely stated below as follows:

3.2Hydrate Deformation for the top Outlets (Well Head)

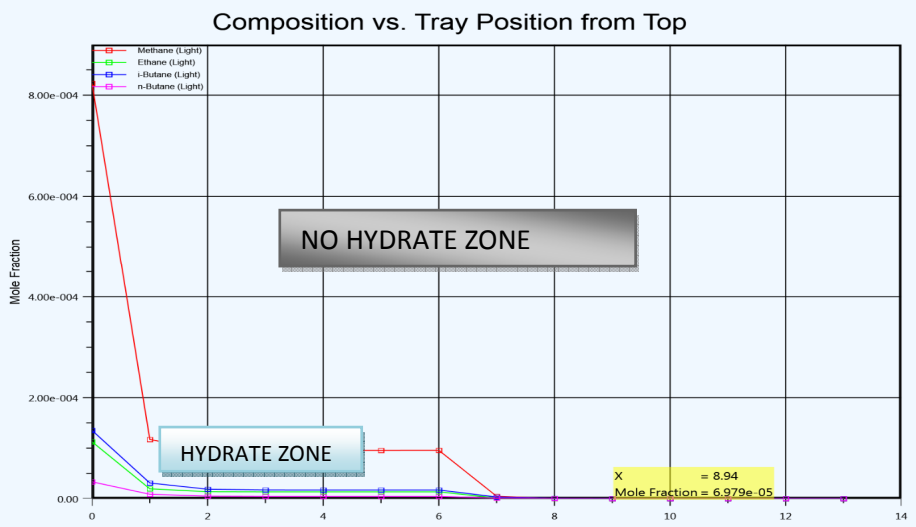

Fig. 5 Showing the Hydrate Deformation curve for the Top Outlets (Well head)

From the graph in Fig.5 it can be observed that the injection of methanol into the well tubing has variational effects towards hydrates formations along the travelling stages of the ethanol through the well head to the turbine, the process started normally with a satisfactory stands of hydrate formation for the dominant composition of the well stream which are they C1 to C4 gases with methane most prompt to the hydrate growth, but as process reaction proceeds over time, the inhibition of hydrate formation using methanol increases hence reducing the formation of the hydrates along the plates which shows proportion integral fall of the curves to a complete zero hydrate formation level at the 7nth tray of the fractionators which has a 0.0 mole fraction m of hydrate in the stream.

3.3 Effect of Temperature on Hydrate Formation

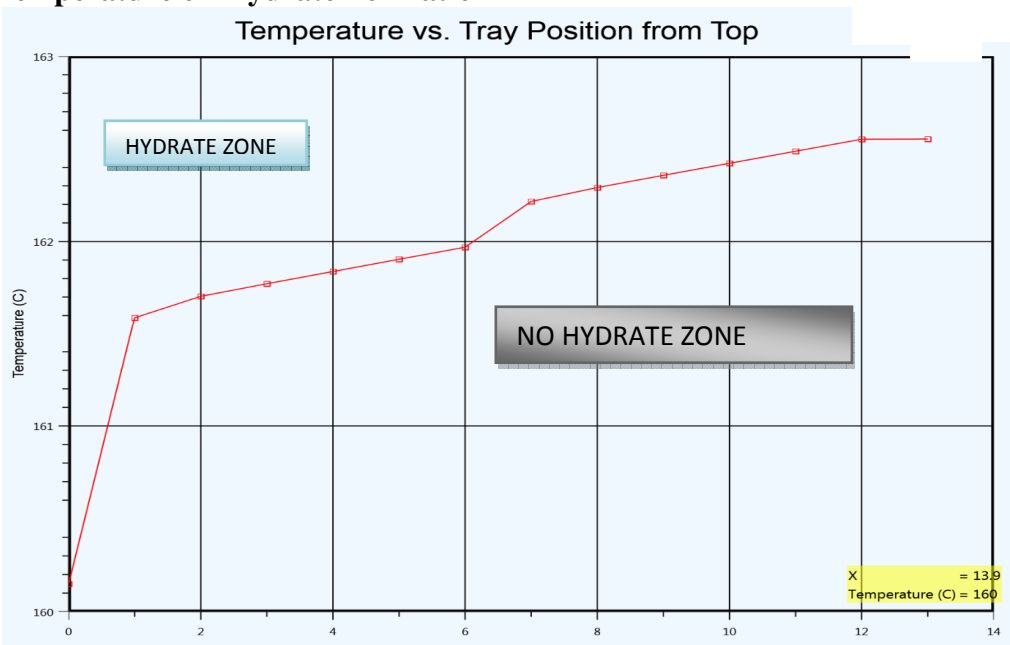

Fig.6 Showing Hydrate Formation Curve at Temperature Effects for Well Tubing

From the graphin Fig. 6it can be observed that the injection of methanol into the well tubing helped to maintain the normal operating thereby shifting the hydrate temperature within the range of 162°C (degree centigrade) formation curve towards the right, as long as the system is operated within the boundaries of this temperature region the risk of hydrate formation is highly reduced, in this situation the well can remain closed for relatively long time without any risk of hydrate formed. Temperature is the key in this perspective, at this condition we are within the region of efficient operation since from the design it is expected that at normal operation, fluid flowing from the top side to the subsea, the system is operated outside of hydrate formation zone due to the fluid temperature which is operated above hydrate formation temperature. During restart of a well, the startup sequence is driven by well head temperature and for the situation where the temperature was low; we can achieve 162°C by the presence of methanol before we start to re-open subsea wells. From the studies, it shows that hydrate is formed when the temperature of the well fluids falls below 161°C, considering the seabed temperature of 4^{0}C and the water temperature of 14^{0}C. The production at every time must be operated at the temperature above 161°C. Under this condition, we can operate outside the hydrate formation zone. So, one can say that from within the temperature of 160°C through 162.5^{o}C, the effectiveness of methanol as a thermodynamic inhibitor over hydrate formation takes place under standard process conditions. As the temperature increases so the possibility of hydrate formation reduces and from the plot it can clearly see that the hydrate formation zone reduces proportionally to increase in temperature which is satisfactory to hydrate formation conditions known in process industries that increase in temperature reduces the possibility of hydrate formation.

3.4 Effect of Pressure on Hydrate Formation

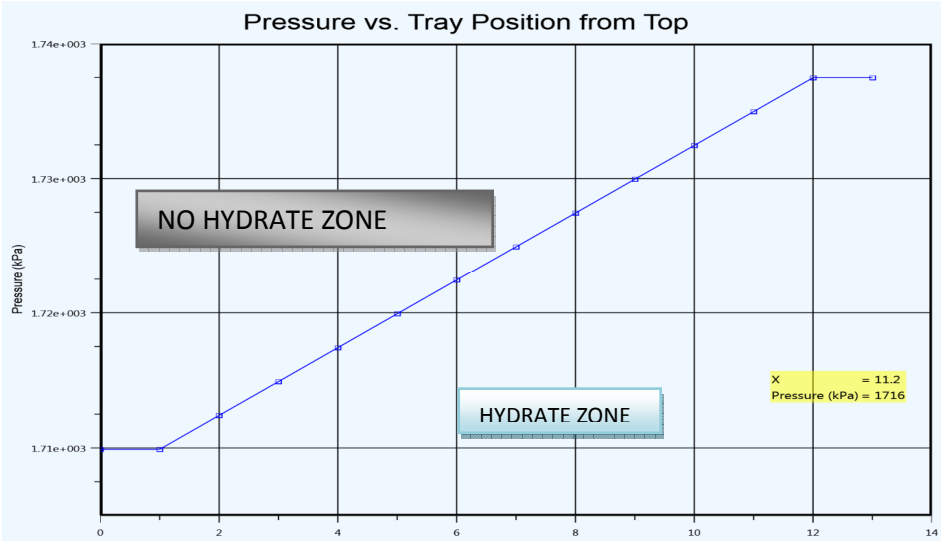

Fig 7 Showing Hydrate Effect of Pressure on Hydrate Formation

From the graph in Fig 7 It can be seen that pressure plays an important role in the prevention of hydrate formation considering the seabed temperature of 4 digress and the fluid pressure of 150 bar, it can create a conducive atmosphere for hydrate to form, but Pressure is critical to the flow of formation fluid to the topside. However, during normal operating condition, it is critical to monitor the pressure gradient on the production system. The main indicator of hydrate plug formation is an unexpected rise in pressure upstream of the plug and the clear reduction of flow rate in the flow part of the system. Close monitoring of wells, manifold, riser base and Topside temperature and pressure condition is necessary to ensure hydrates are not formed on the production system. From the study, it was observed that since the seabed temperature is at 4^0C, if the pressure falls below the normal operating temperature of 345bars, hydrate begins to form so the need for methanol inhibition was vital. Hence at operating condition, the system must be maintained at temperature above 4^0C and pressure below175bar for subsea conditions. This was evident in the Deepwater. As the production is shutdown, the temperature of the fluid falls, there is a rapid drop in movement and vibrations of fluids. This removal of thermal energy allows most fluids to freeze into solid crystalline structure and at higher pressure warmer fluids can freeze due to the tendency of the pressure to push molecules into the crystalline structure.

4.0. Conclusion

From the study the following conditions were drawn:

i. The study concludesthat for Deepwater operation low temperature and high pressure favors the formation of hydrate, considering the low seabed temperature of 4degrees.
ii. The result reveals that methanol is very effective in prevention of hydrate formation in subsea wells and risers as indicated in the values of the FPSO located at 200 km South East of Niger Delta, Nigeria.

iii. The extent to which early detection of pressure increase to temperature drops as process control variables contributed effectively to the prevention of hydrate formation

iv. For well production effectiveness on areas of hydrate prevention, methanol has proved positive as an organic inhibitor provided the temperature did not fall below 45°C with a pressure above 345bar.

REFERENCES

Arnold,.S. (2008).Surface Production Operation Design of Oil Handling Systems and Facilities, Oxford Gulf Professional Publishing,

Bassey, A. (2015). Flow assurance in deep water installation (Private communication). P 24, -34,50-20

Barker, J. W. & Gomez, R. K. (1989). Formation of Hydrates During Deepwater Drilling Operations. J Pet Technol 41(3):297–301

Billy, C. and Dick, J.W.L., (1974). "Naturally Occurring Hydrates in Mackenzie Delta, N.W.T.," Bulletin of Canadian Petroleum Geology, Vol. 22, No. 3, pp. 340- 352.

Claussen,W.F.& Muller H.R, (1951)."Second Water Structure for inert gas hydrates," Journal of Chemical Physics vol. 19, Issue 11, p.1425.

Hammerschmidt, E.G., (1934). "Formation of Gas Hydrates in Natural Gas Transmission Lines," Industrial and Engineering Chemistry, 4 vol. 26, pp. 851-55.

Katz, D.L, (1945). "Prediction of Conditions for Hydrate Formation in Natural Gases," Trans., AIME.vol.160, pp.140-147.

Holder, G.D., & Angert, P.F. (1982). "Simulation of Gas Production from a Reservoir Containing Both Gas Hydrates and Free Natural Gas," paper SPE 11105 presented at the Annual Fall Technical Conference and Exhibition, New Orleans, LA, September 26-29.

Speight, J. D. (2015)" Handbook of Petroleum Product Analysis, 2nd Edition

" ISBN: 978-1-118-36926-5, February

Leffler CT, Schwartz SG, Hadi TM, (2011) Deepwater Petroleum Exploration & Production: A Nontechnical Guidea

Mohammadi, A. H. & Tohidi, B. (2008). Gas Hydrates and Deepwater Operation: Predicting the Hydrate-Free Zone Society of Petroleum Engineers 99427

Reyna, E. M. & Stewart, S. R. (2001). Case History of the Removal of a Hydrate Plug Formed During Deep Water Well Testing. Presented at the SPE/IADC Drilling Conference, Amsterdam, Netherlands.

Sloan, E.D. Jr., (2000). Hydrate Engineering, Society of Petroleum Engineers Publications, Richardson, TX.

Van der Waals, J.H. &Platteeuw,J.C. (1954)."Clathrate Solutions," Adv. in Chemical Physics, Vol. II.Interscience Publishers Inc., New York City. pp.1-58.

