International Journal of Scientific Research and Engineering Development-– Volume X Issue X, Year

Available at
www.ijsred.com

RESEARCH ARTICLE OPEN ACCESS

Design and Development of Smart and Sustainable Pet Feeder

Shivani Mirajkar
Masters of Integrated Product Design
Anant National University, Ahmedabad
shivani.mirajkar@anu.edu.in

Gauravi Ghonge
Masters of Integrated Product Design
Anant National University, Ahmedabad
gauravi.ghonge@anu.edu.in

Parth Atulkumar Shah
Assistant Professor Design Manager Makerspace
Anant National University, Ahmedabad
parth.atulkumarshah@anu.edu.in

----------**********----------

Abstract:

A smart pet feeder system is a product that will help people to feed their pets. Domestic pets are very common in almost all states in our country. As people like to keep pets, pets also need special treatment and care. So, keeping pets is also not an easy task, it's a bit of a responsibility. Feeding them is a timely task and in heating and time-bound schedules it's difficult to treat pets at its best. The main idea of this device is a smart product is to be there at home to feed pets even if the owners are out working or traveling. It will assure pet owners and increase comfort and peace of mind so that they don't need to ask help from their friends or family to keep an eye on their pets or put them in a daycare center. Happy pets, happy hooman!

Keywords — **Embedded system, Arduino, Food,Cats & Dogs, Real time clock,Pet feeder**

----------**********----------

I. INTRODUCTION

When it comes to pets, people like to have them, to play with them. They feel happy around them. But as we talk about taking care of them, feeding them from time to time is a bit of responsibility and it is a very crucial task. The problem becomes especially obvious when the owners have a heavily occupied personal life. When owners do not have time to feed them on time, they intend to leave the feeder full before leaving. An unhealthy diet will almost always cause health problems for their pets. According to recent research, one of the top health concerns is overeating and obesity. Younger pets are usually never satisfied and can keep eating until nothing is left. Even adult pets can have a similar habit, which causes a much shorter lifespan for the pets.

Our project is an automatic pet feeding system using Arduino and a simple smart mechanism to care for pets when they are busy is difficult. And hence our system will be efficient enough to overcome the hurdles faced by humans in taking care of pets. This Pet care System is complete equipment for monitoring all the pet activities and also by making the pet feel free. Also for the future, we are looking to make it more effective based on an app so that owners can keep an eye on them working from their offices or maybe while traveling too.

II. PROBLEM IDENTIFICATION

Nowadays people are very busy with their work schedule & hardly contribute to an organized life.Its hard for orking professionals to take care of their pets.Pets health shoud be taken care of & also pet do suffer from aggressive & hungry mood if not served on their specific time. In this case the problems mentioned will be solved with the idea o

creating a smart pet feeder machine usually pet feeders which are existed are madeup of plastic mateial which hams the enviornment & the surrounding so to keep in mind all the aspects & functionality a sustainable smart feeder which contributes to the enviornment is to be designed which works perfectly at home & is easy to use machine for all age groups.Nutrition time.A idication buzzer tact button would be easy or pet to identify.These reasons can solve the problem of pet feeding.

III. Literature Review

In the market there are many different types of pet feeders available like weight controlled pet feeding system ,that feeds the pet according to the weight of the pet & the pet has to step on it and food will come out in a tray there are certain limitations & solutions which has been observed in this product.[6]The good thing is it can always recognize the weight of the pet also the homeowner can change the training progress for different weight of their pet.But similarly if more than one pet will use the same pet feeder then the system will not recognize the weight already existed in the storage system of the machine and the accuracy rate will differ in this case.Likewise there are also IoT based smart pet feeders which allows the pet owner to set the eating scheduled time through a remote controller, with a voice recorder feature by which a pet can get an indication if the food is coming out of the system.Installing camera into a smart feeder can also be one of the feature to add on to it for making it more security friendly.[7]The most common and old pet feeder is a gravity feeder with its gravity system, the food drops as the cat eats and it relieves from pouring food into a bowl every day. Made Up of plastic.Our goal is to make a sustainable eco-friendly smart pet feeder which will help the pet owners to control the system while they are out for their work or vacation without worrying about their pets.

A. Conceptualization

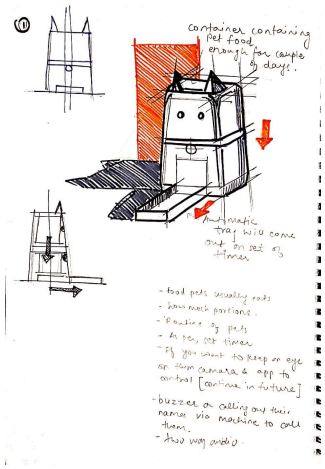

IV. Working Procedure

We are building an Arduino-based pet feeding automation that can automatically serve food to your pet timely. In this circuit,128x64 0.96" monochrome LCD screen is used to display the time using the DS3231 RTC Module. Servo motor is used to rotate the containers to provide the food. You can set the rotation angle and container opening duration according to the quantity of food you want to serve to your pet.4*4 matrix keypad to manually set up the time for feeding the Pet.DS3231 RTC (Real Time Clock) Module, which is used to set the time and date on which your pet should be given food. So, by setting up the time according to your pet's eating schedule, the device drop or fill the food bowl automatically. The Arduino Ethernet Shield allows you to easily connect your Arduino to the internet. This shield enables your Arduino to send and receive data from anywhere in the world with an internet connection. It is responsible for the connection between mobile and Arduino mega board. An automatic pet feeder is designed to dispense specific portions of food at certain times, so they ensure at your pet will be fed on time. Many pets have to be fed at different times during the day. In fact, it is not appropriate for our pets to eat large portions once or twice a day, but they should eat smaller and controlled quantities

several times a day. In turn, many puppies are trained from small to eat well. The automatic food dispensers work by placing the time on the internal timer of the appliance, without the need to use a separate clock. Meanwhile, the food is stored in a sealed container so that it does not get damaged, until the time you decided and the device releases the food.

A.Figure

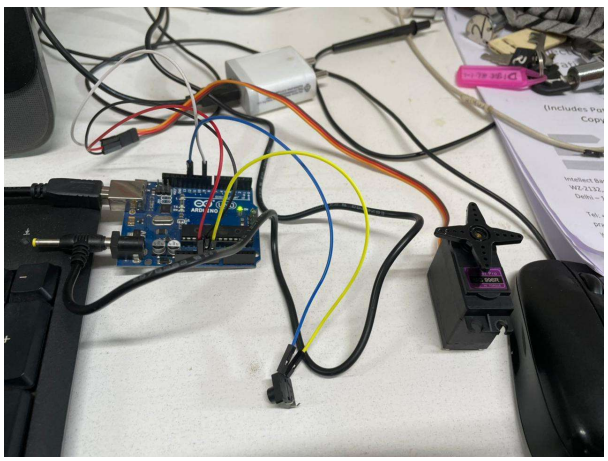

Fig. 2 Circuit and Components.

V. COMPONENTS USED

1) Arduino Uno
2) Sevo Motor
3) RTC Module(Real time clock)
4) LCD screen
5) Tact Button
6) Toggle Button
7) Bread Board

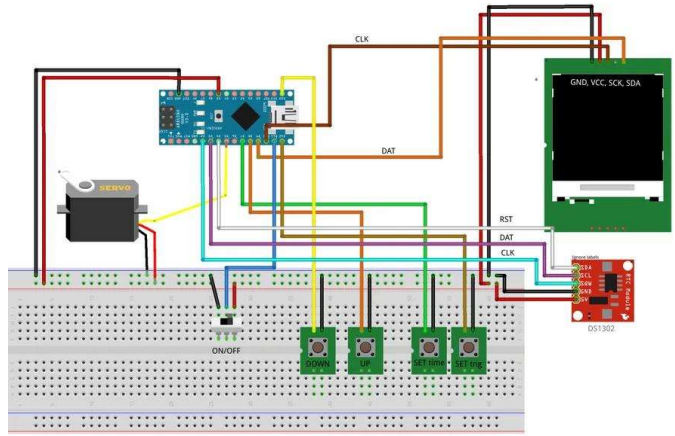

Fig. 3 Circuit connection Diagram..

A. Programming

```
//////////////////////// DS1302 RTC<br>#define RTC_CE_PIN        2
#define RTC_DATA_PIN            3
#define RTC_SCLK_PIN            4
#define RAM_SIZE_BYTES          31 /* Don't change - value from library */
#define RAM_TRIGGER_SET_BYTE    30
#define RAM_ALARM_HOUR_BYTE     0
#define RAM_ALARM_MINUTE_BYTE   4

DS1302 gRtc (RTC_CE_PIN, RTC_DATA_PIN, RTC_SCLK_PIN);
RTCTime   gRTCTime;             // Stores the current time
```

```
class RTCTime : public Time {
public:
        RTCTime();
        RTCTime(Time *t);
        bool setTime(Time *t);
        bool isPassed(Time *tm);
        bool isBefore(Time *tm);
        void increaseHour();
        void decreaseHour();
        void decreaseMinute();
        bool isValid();
        void toStringHHMM(char buffer[], char *desc = "");
        void toStringHHMMSS(char buffer[], char *desc = "");
        void toString(char buffer[]);
};
```

Coding

The program for this machine is one of the simplest programs that you've ever come across. To program it according to your needs, you must understand the following statements. Let's say you want to feed your Pet thrice a day, each time with let's say 50 grams probably. So the lid of the food container should be open for a minute (considering usual dry cat food to be dispensed 50 grams).

During this minute, the food will keep falling into the pet's bowl and the lid will close once the food in the bowl reaches 50 gm. This process needs to be repeated. Now, let's assume that your Dog eats at 7 AM, 2 PM, and 9 PM. After every 7 hours during the day and after 10 hours of the night. The file contains a program to feed your pet with 50 gm of standard pet food at 7 AM, 2 PM, and 9 PM.

VI. DESIGN OF SMART PET FEEDER

Fig. 4 Final Product Render

In the replacement of polymer based outside body for our product we have chosen a green alternative way like strong wooden material Teak wood. One of the greatest attributes of wood is that it is a renewable resource, it has low carbon impact and low embodied energy. The amount of energy needed for producing wood products is much less than comparable products made from other materials. Carbon in wood remains stored until the wood deteriorates or is burned. World facing climate change issues to an great extent, this is our small solution to help build products using sustainability.

Fig. 5 Final Product 1:1 scale working prototype

VII. CONCLUSIONS

This project brought together several components and ideas to achieve a common goal that is to design a smart pet feeder using Arduino UNO. The key components of the project include a servo motor sensor which will be programmed to serve the food as soon as the pet comes. It relieves the owner from having to feed his pet multiple times a day. In the coming future, our smart pet feeder will allow the owner to watch their pets through the smartphone app and serve accordingly. The owner does not have to worry about making plans or feeding his pet because of this smart pet feeder. This automatic pet feeder serves as a helping hand as it works efficiently in the absence of the owner.

ACKNOWLEDGMENT

We would like to express our special thanks to our Prof.Parth Atulkumar Shah for the continuous focus for our project and related research, for his patience, encouragement, and vast knowledge. His guidance helped us alot to reach this stage of research for our project. His valuable support has made it possible to complete this project. Also coworkers of Makers Space of the Anant National University. We are grateful to friends and neighbors for their insights about their pets to provide the food to the pets automatically using our machine. Last but not the least, we all the authors are very much thankful and grateful to our family members for moral support, inspiration with financial support to finish the project in time with positive results which

achieved after a contribution of works of searching the materials from different location and assembling all that to get the results with a team work to complete the project successfully with continuous passionate trial and error method.

REFERENCES

1. Design and development of IoT based Smart Pet Feeder Priya Mondal [1], Dr. Swapnili Karmore [2], Rajnandnee Parnami [3] [1] Student, [2] Assistant Professor, [3]Student
2. Automatic Pet Feeder Using Arduino Mritunjay Subhashchandra Tiwari 1, Sahil Manoj Hawal 1, Nikhil Navanath Mhatre 1, Akshay Ramesh Bhosale1, Mainak Bhaumik2
3. https://www.researchgate.net/publication/334459650_Arduino_Mega_based_PET_Feeding_Automation
4. Arduino., "Download the Arduino Software", Source code, Building the code, and Programming. Available [Accessed: 12 Mei 2016]: https://www.arduino.cc/en/Main/Software
5. Reliable Smart Pet Feeding Machine Using Arduino Uno Starter Kit To cite this article: M S Z M Suffian et al 2021 IOP Conf. Ser.: Mater. Sci. Eng. 1101 012033 View the article online
6. http://eprints.utar.edu.my/3695/1/fyp_CN_2019_LWQ_1407702.pdf
7. http://repository.psa.edu.my/bitstream/123456789/2636/1/SMART%20PET%20FEEDER.pdf