RESEARCH ARTICLE OPEN ACCESS

Design of Bobbin Ballast Terminal Bender Tools Using The Verein Deutche Ingineur 2222 Method

HendroPrassetiyo[1], Agus Nugraha[2], Lisye Fitria[3]

[1,2,3]Departement of Industrial Engineering, InstitutTeknologiNasional Bandung, Bandung-Indonesia

Email: prasshendro@gmail.com

----------**********----------

Abstract:

This paper discusses the manufacture of a tool for production of the bending process at the terminal section of the bobbin. The design of the tool is carried out to speed up the bending process and to make it easier for operators to perform bending and increase productivity. The design process of the ballast bobbin terminal bending device uses the VereinDeutcheIngineur 2222 method. The results of the implementation of the tool show that it can reduce the total machining time and increase productivity.

Keywords **—Component, Production, Bending Process, Production Time, Verein Deutsche Ingineur 2222 , Productivity**

----------**********----------

I. INTRODUCTION

The development of the manufacturing industry today encourages to produce products in an easy and fast way which aims to minimize production costs. Many companies are looking for ways to increase company productivity by reducing production costs without reducing the quality of the products. One of the ways that can be used to increase productivity is by using tools in the production process which aim to help the work done by humans so that the work becomes easier and faster.

The ballast is one of the components of the tubular lamp which has a function as a starter when the lamp is turned on. The ballast has a component, namely a bobbin which has a function as a place for the coil. One of the production processes carried out in the manufacture of ballasts is the bending process of the bobbin terminal. At present, the process of bending the bobbin terminals is still done manually and is done one by one by the operator, so that the bending of the bobbin terminals is still inefficient and the possibility of a rework process occurring. One way that can be done to produce a more effective and efficient bending process is by designing production tools Jig and fixture [1], so that it can speed up the bending process and can minimize the time and cost of bending. The use of production tools can help the duplication of quality products during the production process [2], and the scope of their use is quite wide on the production floor [3]. This study will discuss the manufacture of ballast bobbin terminal bending tools using the Verein Deutsche Ingenieuer 2222 (VDI 2222) design method approach.

II. LITERATURE REVIEW

The design method applied in the design of the ballast bobbin terminal bending tool uses the design stages according to Verein Deutsche Inginieuer 2222 (VDI 2222). The VDI 2222 method is a design method using a systematic method of design to formulate and direct various kinds of design thinking that will develop [4]. The stages of designing the Verein Deutsche Inginieuer 2222 (VDI 2222) method can be seen in Fig. 1.

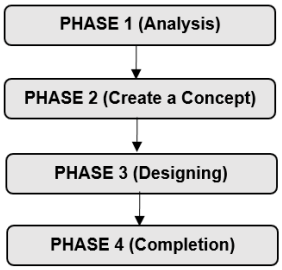

Fig. 1. Stages of Designing the Verein Deutsche Inginieuer 2222 Method (VDI 2222)

A. PHASE 1 (Analysis)

Analysis is a design activity to identify problems that exist in the field. The activities of this analysis include:

i. Job analysis
ii. Feasibility analysis

B. PHASE 2 (Create a Concept)

The next activity is the create a concept, which is an activity to make design specifications that contain the technical requirements of a product compiled from a user's wish list. The activities to create this concept include:

i. Clarify work
ii. Make a list of demands

C. PHASE 3 (Designing)

The next activity is designing. This activity is describing the form of the product as a result of phase 2. The activities carried out in designing are as follows:

i. Make pre-designs scale
ii. Eliminating critical parts
iii. Make predesigned improvements
iv. Determine the predesign that has been perfected
v. Cost calculation

D. PHASE 4 (Completion)

Completion is a final activity in a design. Where this activity will realize the results of thoughts starting from the analysis stage to the design stage, the following are activities from the completion stage:

i. Create an array drawing
ii. Create part / detail drawings and parts lists
iii. Making a prototype

III. RESULTS AND DISCUSSION

A. Identification of the Current Condition of Assistive Devices

The product which is the object of research is the bobbin ballast terminal bending device. Bobbin Ballast is a component of the tubular lamp. The ballast itself has a function for the tubular lamp as a starter and a voltage converter, and in the ballast there are two bobbins that function as a coil. Products that are the object of research can be seen in Fig. 2.

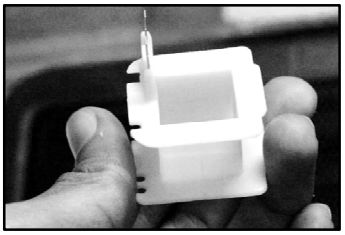

Fig. 2. Ballast bobbins

Technical drawings of ballast bobbins can be seen in Fig. 3.

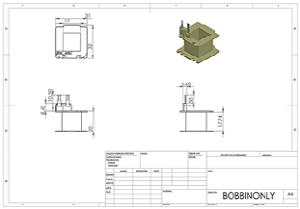

Fig. 3. Drawing of ballast bobbin technique

There are currently two tools available for bending process, namely boxes and bamboo sticks. The first bending process performed by the operator is bending 90° against the ballast bobbin terminal. The first bending process performed by the first operator can be seen in Fig. 4.

Fig. 4. The first bending process

The above bending process is by pressing the ballast bobbin vertically until the bobbin terminal bends 90°. This bending process is carried out one by one for approximately 10 bobbins in 1 tray row and in a tray consisting of 8 rows. After the first bending process is carried out, the next process is arranged into boxes with the number of 15 bobbins per box for the second bending process to be carried out by the second operator.

The second operator receives a bobbin which will be carried out by the bending process in the form that has been inserted into the box, where each box consists of 15 bobbins. The bending process is still carried out manually by the operator with the help of a simple tool, namely bamboo sticks, while the box functions as a tool to hold the bobbin in place when bending is to be carried out. The second bending process can be seen in Fig. 5.

Fig. 5. Image of the second bending process

The bending for each process can be seen in Fig. 6.

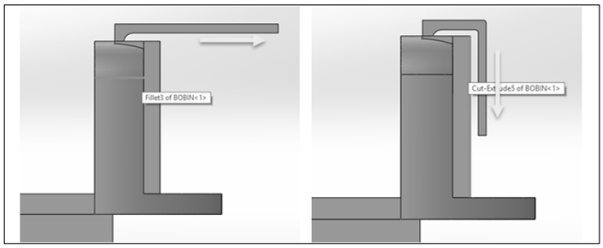

Fig. 6. Results of the first bending (left) and the second bending (right) of the bobbin terminal

B. Creating Design Concepts

i. Clarify the Work of the Design of the Bending Tool

The first design process carried out is to determine and describe in detail the process of work carried out during the bending process. This aims to assist the identification process of the needs in the design of the bobbin terminal bending tool. The order of work for the use of the bobbin ballast terminal bending tool can be seen in Fig. 7.

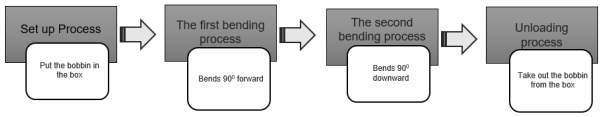

Fig. 7. Design work of bending tools

The result of the bending process will be continued to the soldering process at the soldering work station. The ballast bobbin is ready for the soldering process when the bobbin terminal is bent on the bobbin body.

ii. Make a Demands List for the Design of the Bending Tool

The list of demands is an explanation of what must be achieved in designing a tool. The list of demands in the design of the ballast bobbin terminal bending tool can be seen in Table 1.

TABLE I.
LIST OF DEMANDS FOR THE DESIGN OF A BALLAST BOBBIN TERMINAL BENDING TOOL

No.	Demands List	Purpose
1	The capacity of the tool can accommodate 9 Bobbins	Bobbin production target per day can be achieved
2	Bending by 90^0	Results are in accordance with product specifications
3	Combining jobs from 2 operators to become 1 operator only.	Reduces setup time and bending time
4	Simple Tool	Easy to operate
5	Bending Speed 0.12 minutes	Bobbin production target per day can be achieved.

iii. Determination of the Capacity of the Bobbin Terminal Bending Tool

The capacity of the tools to be designed is nine bobbins. Image of bobbin laying dimensions can be seen in Fig. 8 and Fig 9.

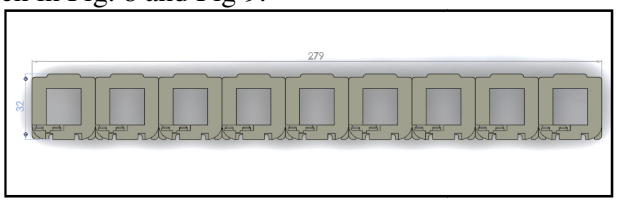

Fig. 8. Dimensions of 9 bobbins

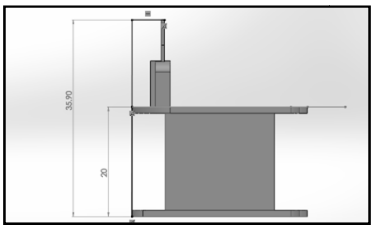

Fig. 9. Bobbin height dimensions

iv. Design of Bobbin Terminal Bending Tool

The structure of the bobbin ballast terminal bending auxiliary component can be seen in Fig. 10.

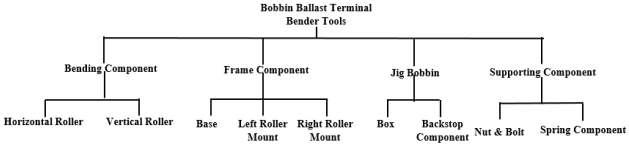

Fig. 10. Structure of the bending auxiliary component

The design of the bending tool consists of 6 main components, including the base, the left roller seat, the right roller seat, the horizontal roller, the vertical roller and the box. The tools that are designed must be able to hold the work piece during the production process and be able to direct the movement of the bending device [5]. The design of the bending tool can be seen in Fig.11.

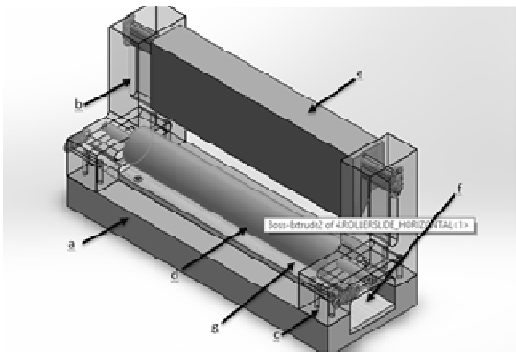

Fig. 11. The design of the bending tool

Information:

a. Base
b. Left Roller Mount
c. Right Roller Mount
d. Horizontal Rollers
e. Vertical roller
f. Box
g. Bobbin Holder

The arrangement of the bobbins into the base can be seen in Fig. 12.

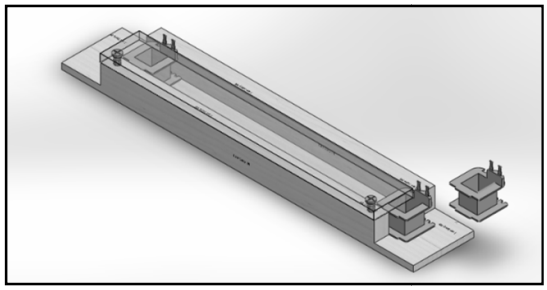

Fig. 12. The process of inserting a bobbin into a box component

The bobbins are inserted one by one in the box components. The position of the box that is already filled with bobbins can be seen in Fig. 13.

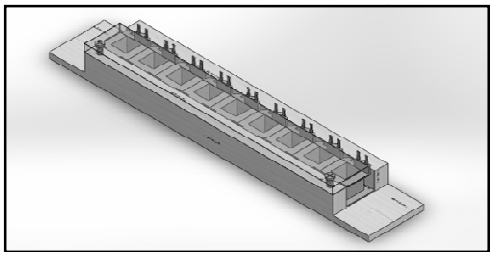

Fig. 13. Bobbin position on box component

The process of inserting the box into the bobbin ballast terminal bending device can be seen in Fig. 14.

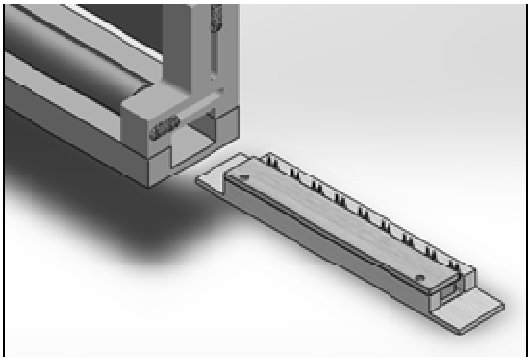

Fig. 14. Beginning of the process of inserting the box on the bending tool

The results of the horizontal bending process with a horizontal roller can be seen in Fig. 15.

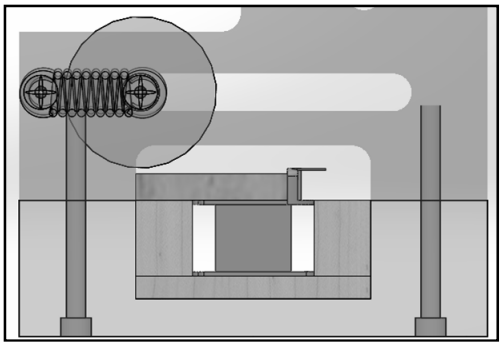

Fig. 15. Result of horizontal roller bending

The next process after horizontal bending is carried out by the vertical bending process by pressing the vertical roller to bend the terminal. The initial conditions of the vertical roller bending process can be seen in Fig. 16.

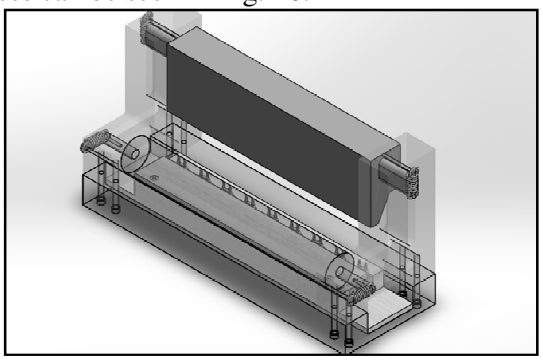

Fig. 16. Initial conditions of the vertical bending process

The final condition of vertical bending by pressing the vertical roller can be seen in Fig. 17.

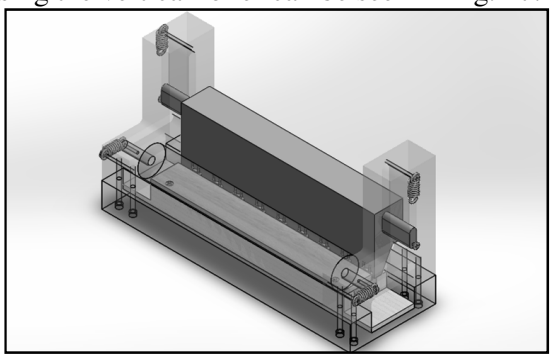

Fig. 17. The final condition of the vertical bending process

The result of the vertical bending process will result in a terminal position of bending 90^0 in the bobbin body, the result of this bending can be seen in Fig. 18.

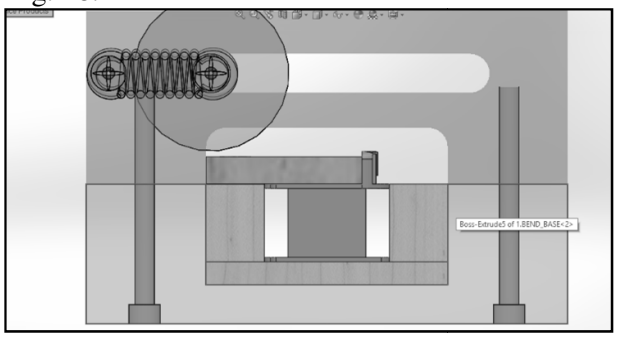

Fig. 18. Result of the vertical bending process

The next process is the unloading process by removing the box from the left side of the tool by pushing it, after which the bending bobbin can be taken and the next process is carried out. The unloading process can be seen in Fig. 19.

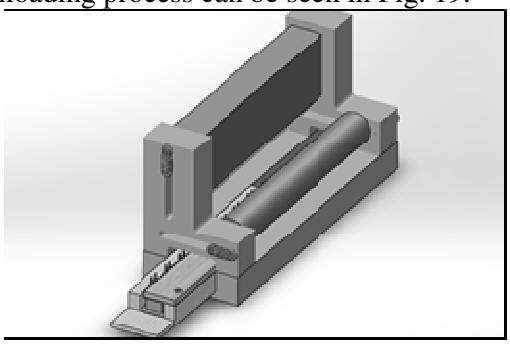

Fig. 19. Unloading the bobbin from the bending tool

IV. PRODUCTIVITY ANALYSIS OF USING TOOLS

Comparison of the resulting productivity based on current and proposed tools can be seen in Table II. The bending condition with the design of the bending tool is more efficient than the current condition with a time saving of 26.9% (0.190 minutes). In the proposed design, there is no need for additional operations that require the operator to adjust or position the work piece against the auxiliary tool as in the previous tool.

TABLE II.
COMPARISON OF THE RESULTING PRODUCTIVITY

	Bending Time (Minutes) / 9 bobbins	Number of Products / Hour (Unit)	Number of Products / Day (Unit)
Tools Now	0.702	769	5,383
Proposed Tools	0.512	1,053	7,371

V. CONCLUSION

The proposed ballast bobbin terminal bending tool can be used as an auxiliary tool for the ballast bobbin terminal bending process. The tools that are made can increase production productivity and reduce the cost production of making ballast bobbin terminal.

REFERENCE

[1] [1] K. Avadhut, P. Vishal and H. Patil, "Design of Drilling Jig for Rod Guide", International Journal of Current Engineering and Technology, 2017.
[2] H, Edward G, "Jig and Fixture Design", Fourth Edition, Delmar Publisher, 1996.
[3] M. Ali, and G. Mahalle, Design and analysis of weight lever drilling jig. International Journal of Pure and Applied Research in Engineering and. Technology 1 (8): pp. 177-186, 2013.
[4] G. Pahl, J. Feldhusen and K. Grote, Engineering Design: A Systematic Approach, 3 ed., SpringerVerlag London, 2007.
[5] G. Qin, and W.Z. Min Wan, "Analysis and Optimal Design of Fixture Clamping Sequence", ASME for publication in the Journal Of Manufacturing Science And Engineering, 2006.

