RESEARCH ARTICLE OPEN ACCESS

PLC Based Bottle Filling System

Rahul S Bhoge[1], Saad K Khalife[2], Musharraf Shahid Shaikh[3], Samiran Suresh Waghmare[4], prof. Prashant Bhosale[5]

[1,2,3,4] Student, Instrumentation Engineering Department, Bharati Vidyapeeth College of Engg, Navi-Mumbai, Mumbai University, India

[5]Project Guide, Instrumentation Engineering Department, Bharati Vidyapeeth College of Engg, Navi-Mumbai, Mumbai University, India

----------**********----------

Abstract:

Automation is the utilization of different control techniques for operating equipment's such as operations in factories, aircraft and other applications with reduced human power. The filling process is a mission performed by a machine that fills liquid products such as water or cold drinks.

The objective here will be to meet the demand and to develop the "Automatic bottle filling system using PLC". The intention will be to obtain the requirement in the industries to get an excessive high percentage output and with a low power consumption to get the high accuracy. The project is developed in accordance to meet the requirements in the industrial automation. Also, since the project uses the PLC, it's maintenance is less as compared to the devices which obtains the same output but uses the controller other than PLC.

Keywords **—PLC MM3030, Solenoid Valve, Conveyer Assembly**

----------**********----------

INTRODUCTION

Filling machines are machines of the packaging industry used for filling of liquids, gases, paste or powder into containers. Capping machines are used to cap the bottles filled with material. So here we develop a system to demonstrate the filling as well as capping system used for bottles in industries using PLC and mechanical assembly. The system makes use of filling using piston and syringe arrangement along with a capping system using motorized arrangement all integrated in a single machine.

The entire assembly consists of a conveyor that pushes empty bottles towards the filling head. The filling head is responsible for filling of bottles with water, later this assembly pushes the bottle in a circulating disc, which brings it to the capping station that places a cap on the bottle. The bottle that reaches the cap turning station which is a motorized arrangement responsible for spinning and tightening the cap on bottles. After this step, the assembly pushes the bottle over to the next point where it is rolled down the system as a finished product. We use a PLC based system to control the entire system working using sensors and motorized assembly.

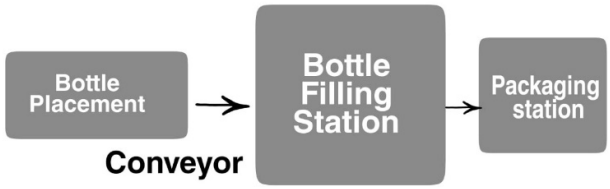

Fig. 1 Basic Operation

Fig. 2 PLC Panel

Basics of PLC

PLCs are much faster at cycling and interacting with the outside world. If you look at an image of an Allen Bradley PLC system, it will be surprising that only the module at the very left is the computer. The rest of the machine consists of modules that interact with input devices or sensors, and there are also modules which control the output devices.

The control language of these systems had to be understood by electricians as these systems are being used more and more and that is how ladder logic was created

Ladder Logic Use in Computer Automated Programming

Although this is likely to change soon, till now different versions of ladder logic are used in PLCs. Ladder Logic is a programming language which appears very similar to the old versions of electrical diagrams and electrical symbols, but in fact, it is placed inside the processor in the form of a sequential program which controls things.

The looks of this PLC programming are like an electrical schematic, but these symbols simply represent types of function. While the input relays examine sensors in the real world, the output systems are turning off or on a device in the real world. Any boxes in between stand for different mathematical calculations or other functions like any other computer software.

Objective of Work

The basic purpose and goal of this study is to make a fully functional and automated compact portable PLC bottle filling System which is also monitored by IOT. This will increase the speed and productivity of the plant process with reasonable amount of investment. Less number of humans are needed and thus efficiency of the output is also increased.

Problems Background

For a major period of time, in small industries or plants bottle filling or packaging in general is carried out by manual means or manual labour as it is much more cost efficient than investing in expensive automation machinery for the task.

This often causes operator related errors, inconsistency in work and hygiene issues which are usually overlooked.

However, by implementing affordable and portable PLC such as MM3030 it is possible to automate bottle filling at plausible capital and thus produce profit while boosting the quality and efficiency of the packaging and the product. It is now also possible to maintain a hygienic plant environment and void of any contagious or harmful bacteria with the help of automated fillings plant ,plus their portability aids in reduced transport fee and thus more efficency

Methodology

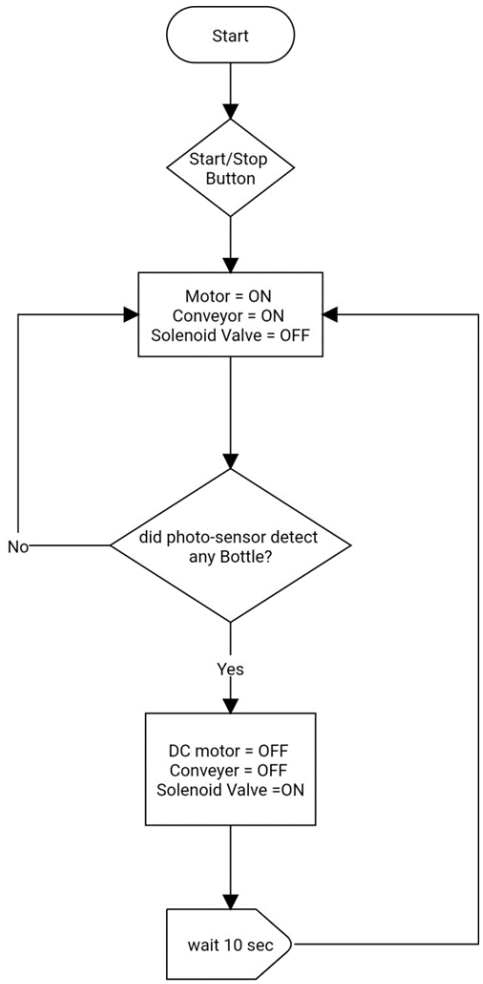

Fig. 3 Flow Chart

In the beginning, the System is set into and auto-operation mode for continual operation. Then the

(Auto-Start/Stop Push button is used to toggle the switch which is used here) This turns on the remote DC motor and the conveyor is set in action .The D.C. motor of which the shaft is paired directly with the shaft of the conveyor roller. This motor has an input voltage of 12v with an input current of 620mA to14A. This range is selected as it provides a constant torque range. It has some definite torque. The motor here comes with a metal gearbox and focused shaft. High-torque motors are used on both sides of the conveyor roller for uninterrupted movement and semblance. As soon as this part of the process begins the entire system is turned OFF automatically. It maintains the the OFF mode till the tank is refilled with water up to a certain level depending on a set timer which is calibrated accordingly to set fill the entire container, After the tank is completely filled with water the operation of the motor and thus the conveyor is resumed once again until the process loops out our is stopped manually.. The EXTRIMITY SWITCH is also designed into this system which works like a fuse and disconnects the entire PLC system whenever any eventful conditions occur.Now moving towards the electrical and hardware linkage of the PLC in this system and the program/software logic used along :.A ladder Logic program is implemented here with the help of RXLogix57 500 Free to use program

Hardware Used

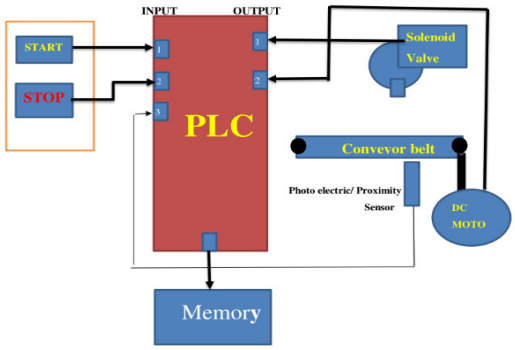

Fig. 4. Comprehensive block diagram

Tools :

All key components used in this project are mentioned as below

SM3030 PLC

Fig. 5 PLC Module

The SM3030 PLC is a 3 channel compact PLC with inbuilt HMI which comes with 4x16 line character LCD display.

A programmable logic controller (PLC) is an digital machine which is often used in various controller operation. and it acts as the brain of the operation where they are used. With the PLC revolution in industries are changing very rapidlyand with its effort they are helping industries to move towards affordable, compact and more editable automation. They are used in industries where the filling and capping of bottle, also used in traffic controlling system. The PLC is used because they

Solenoid Valve

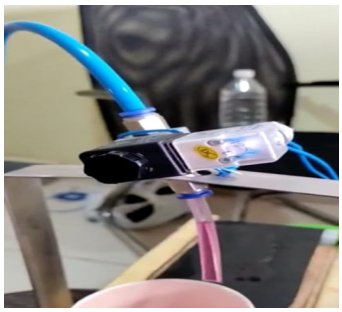

Fig. 6 Solenoid Valve

The C02 series three way normally closed solenoid valves manufactured by Nadi Srl in Italy offer reliable operation in a compact valve format. They are available in brass or stainless steel bodies with 1/4″ BSP or NPT threads and suitable for gas or liquid media.

DC Geared Motor

An electric motor is an electrical machine that converts electrical energy into mechanical energy. Most electric motors operate through the interaction between the motor's magnetic field and electric current in a wire winding to generate force in the form of rotation of a shaft. Electric motors can be powered by direct current (DC) sources, such as from batteries, motor vehicles or rectifiers, or by alternating current (AC) sources, such as a power grid, inverters or electrical generators.

Proximity sensor

Fig. 7. Photo sensor

Operating voltage is 10 to 30 v and its output current is 500 mA. It's output type is PNP 3 wire (Black, Blue and Brown). It is made of stainless steel.

In this project, It is used to sense the position of the bottles. A round shaped sensor is used which can detect opaque, transparent or any other kinds of objects. In this case it is detecting different plastic bottles. The sensor used here is a diffused reflective type q sensor. The range of sensing the objects are 500 mm.

Control Relay Module& Contactor

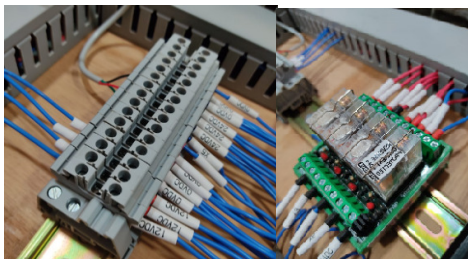

Fig8. Relay cards and Contactor module

An electromechanical relay is an electrical switch actuated by an electromagnet coil. As switching devices, they exhibit simple on and off behaviour with no intermediate states. The electronic schematic symbol for a simple single pole, single throw(SPST) relay is show here.

All title and author details must be in single-column format and must be cantered.

SMPS 12v & 24v

Fig 9. SMPS supply 12v & 24v

An SMPS adjusts output voltage and current between different electrical configurations by switching the basics of typically lossless storage such as capacitors and inductors. Ideal switching concepts determined by transistors controlled outside of their active state that have no resistance when 'on' and carry no current when 'off.' It is the idea why switches with an ideal function will operate with 100 per cent output, that is, all input energy is provided to the load; no power is wasted as dissipated heating.

Push Mechanical Buttons

Fig 10. Push muttons & switch

A push-button or simply button is a simple switch mechanism for controlling some aspect of a machine or a process. Buttons are usually made out of hard plastic polymer, usually plastic or metal. The surface is usually smooth or shaped to accommodate the human finger or hand, so as to be easily compressed or pushed. Buttons are most often biased switches, although many un-biased buttons still require a springto return to their un-pushed state.

Conveyor Assembley

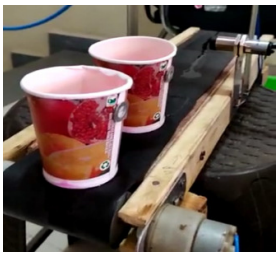

Fig 11. Conveyor Assembley

A conveyor belt is the carrying medium of a belt conveyor system (often shortened to belt conveyor). A belt conveyor system is one of many types of conveyor systems. A belt conveyor system consists of two or more pulleys (sometimes referred to as drums), with an endless loop of carrying medium the conveyor belt that rotates about them. One or both of the pulleys are powered, moving the belt

and the material on the belt forward. The powered pulley is called the drive pulley while the unpowered pulley is called the idler pulley.

Software Description

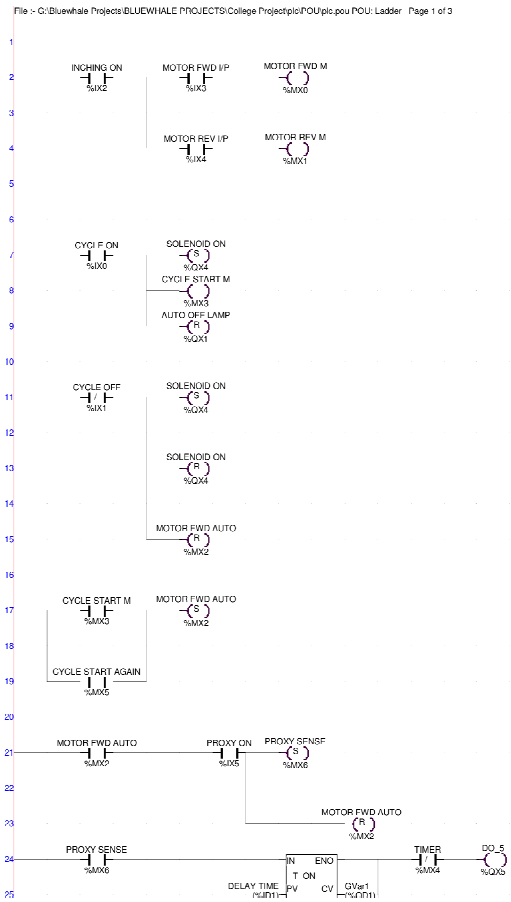

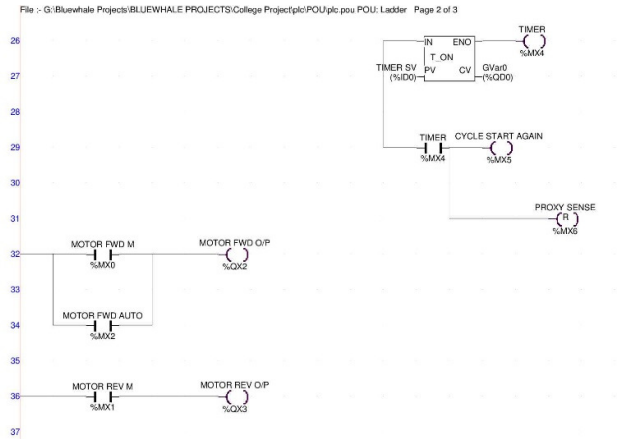

Implementation

First we start to work on the software part i.e. ladder logic of PLC, then we approach the vendor for renting out PLC for our project and purchase other components such as different sensors, solenoid valve, motor, build the conveyor system Assembled it with the PLC. The software we use for plc is rs logix and the PLC is custom made . The system works when the push button is pressed and the the motor starts working and the conveyor starts to move it stop when it reaches under the solenoid valve when the water is filled, the valve turns on the conveyor start to move this process is continued until it reaches a batch is complted so on and so forth the water filling plant can be used in beverage and different food industries.

Work done

The water filling machine starts when the push button switch is pressed and this caused working the DC motor hence the conveyor belt is moving. The bottles move on the conveyor belt until the first bottle reaches under the solenoid valve where the laser is cut by the bottle, hence the photoelectric sensor is sensing the bottle and gives a control signal to the PLC through the relay(24v). This leads to stopping the DC motor and hence the conveyer belt stops and the solenoid valve operates and the bottle starts filling the water (using timer in PLC to time this

process).when the bottle is fully filled with water, the solenoid valve is closed and the motor is working to move the conveyor belt again to carry the bottle away from the solenoid valve. If another bottle is detected under the valve, the process will be repeated and when the stop button is pressed, the whole process will be stopped. The block diagram for water filling machine is shown in flow chart while the overall automatic process is shown in flow chart.

Future scope

Consumer product manufacturing brands meticulously strategize the way their products need to be packaged to align with their branding tactics. Packaging plays an essential role in determining the product value in terms of its shelf-appeal, to offer the right blend of consumer experience and branding. Driven by the constant penetration of innovative packaging products, the packaging industry has been witnessing skyrocketing growth over the past couple of years. Amidst this, packaging machinery lays the ground for future packaging potential. The introduction of versatile packaging equipment, such as filling machines, by manufacturers, is capturing the attention of consumers who are looking for next-gen machines, where efficiency and speed are the two most significant criterions of adoption. Furthermore, highly compatible machines that do not require highly-skilled operators, enabling greater operational efficiency, are also becoming favored choice.

Conclusion

The system offers advantages like portability, low power consumption, flexibility. the careful selection of the sensors and their mounting reduces the cost of the system. The designed system with certain modifications can be made useful in the beverage and the other industries. due to less human interventions and automation it is possible to maintain hygienic environment during liquid filling ,special during this time.

REFRENCES

[1] Rijoy Paul, Nima Varghese, Unni Menon, Shyam Krishna K, “Railway Track Crack Detection”, International Journal of Advance Research and Development, Volume3, Issue3, 2018

[2] JB Gupta "Electrical Fundamentals" S K Kataria and sons; Reprint 2012 edition

[3] Ramavath Shwetha, P. V. Prasad Reddy, “Railway Track Crack Detection Autonomous Vehicle”, Global Journal of Advanced Engineering Technologies, Volume 4, Issue 3- 2015.

[4] S. Sam Jai Kumar, T.Joby Titus, V.Ganesh, V.S. Sanjana Devi, “Automotive Crack Detection for Railway Track Using Ultrasonic Sensorz”, International Journal of Engineering Technology and Computer Research (IJETCR), Volume 4; Issue 6; November-December; 2016; Page No. S34-37.

