RESEARCH ARTICLE OPEN ACCESS

# Power Management in Building Based on Daily Prediction

Sreehar.S*, Venkata Dinesh.P*, Chandra Kiran Reddy.V* ,Shaik Ameer*, M.Ganesan*, Ganesh Jeyaram**
*(Department of EEE, R.M.K. Engineering College, Kavaraipettai
Email: mgn.eee@rmkec.ac.in)
** (Senior Engineer, R&d, MERCETES-Benz R&D Ltd, Bengaluru)

----------**********----------

## Abstract:

We should save electricity to ensure that it is used properly in the service of humanity. The wastage of power should be stopped. If we become careless about that there will be regular and prolonged load-shedding. If we keep the lights on during daytime, we will be constrained to be in darkness at night. We need electricity at every moment and in every walk of life. Electricity is considered the soul or the life without which the entire world remains dead and dormant. Our project aim is to design and implementation of principally monitor's electrical parameters of household appliances such as voltage and current and subsequently calculates the power consumed. The novelty of this system is the implementation of the controlling mechanism of appliances in different ways. The developed system is a low-cost and flexible in operation and thus can save electricity expense of the consumers. All data are recorded in a server to control the power control and even how much load is consumed by the appliance such as light, fan.

*Keywords* — **Wireless Sensor Network, Power Management, Electricity**

----------**********----------

## I. INTRODUCTION

A wireless sensor network (WSN) of spatially distributed autonomous sensors to monitor physical or environmental conditions, such as temperature, sound, pressure etc. The WSN is built of "nodes" – from a few to several hundreds or even thousands, where each node is connected to one (or sometimes several) sensors. Each such sensor network node has typically several parts: a radio transceiver with an internal antenna or connection to an external antenna, a microcontroller, an electronic circuit for interfacing with the sensors and an energy source, usually a battery or an embedded form of energy harvesting. A sensor node might vary in size from that of a shoebox down to the size of a grain of dust, although functioning "motes" of genuine microscopic dimensions have yet to be created. The cost of sensor nodes is similarly variable, ranging from a few to hundreds of dollars, depending on the complexity of the individual sensor nodes. Size and cost constraints on sensor nodes result in corresponding constraints on resources such as energy, memory, computational speed and communications bandwidth. The topology of the WSNs can vary from a simple star network to an advanced multi-hop wireless mesh network. The propagation technique between the hops of the network can be routing or flooding. Power Management is a feature of some electrical appliances, especially copiers, computers and computer peripherals such as monitors and printers that turns off the power or switches the system to a low-power state when inactive. In computing this is known as PC power management and is built around a standard called ACPI. This supersedes

  

APM. All recent (consumer) computers have ACPI support. In the military, ""Power Management"" often refers to suites of equipment which permit soldiers and squads to share diverse energy sources, powering often incompatible equipment. In the proposed system, power consumption of devices is measured and maintained to resist the overflow of power for a particular device. The owner is alerted such that in case of power overflow and controlling the device. Hence, it emerges as an advance technique in this real world to control their device. Accuracy power is high and time consume for measurement is less. It can be applied for industry level to control their overall device power measurement and safety can be achieved by using this process.

## II. BLOCK DIAGRAM OF PROPOSED SYSTEM

### *A. Proposed Block Diagram Description*

Task1: • When the AC supply is received, the system checks the supply. • Accordingly the system calculates the voltage and current • Calculates cost of power used automatically. Task2: • Some appliances have limit in usage. In order to increase or maintain the life of the electric appliances we limit the working of appliances. Task3: • It is not always necessary to be there at home. Even when we are not physically present at home we can control the power supply to home appliances. We design a remote and manual control of power supply. Task4: • All databases are recorded in a server to control the power control.

### *B. Microcontroller*

The microcontroller is the heart of the power saving unit, which get the data from sensor and driver the control circuit. It is an integrated chip that is often part of an embedded system. The microcontroller includes a CPU RAM, ROM, I/O ports and timers like a standard computer but they are designed to execute only a single specific task to control a single system they are much smaller and simplified so that they can include all the functions required on a single chip. Other than the normal Microcontrollers PIC Family supports more features.

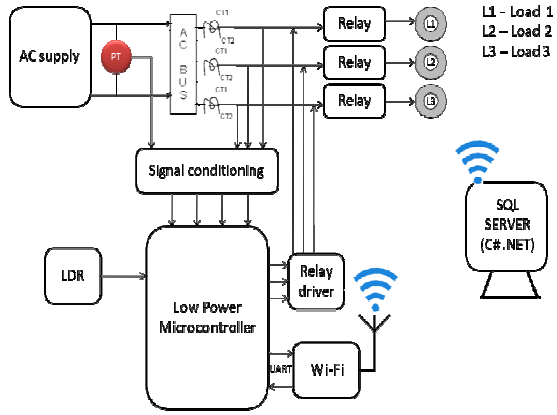


Fig. 1 Block Diagram

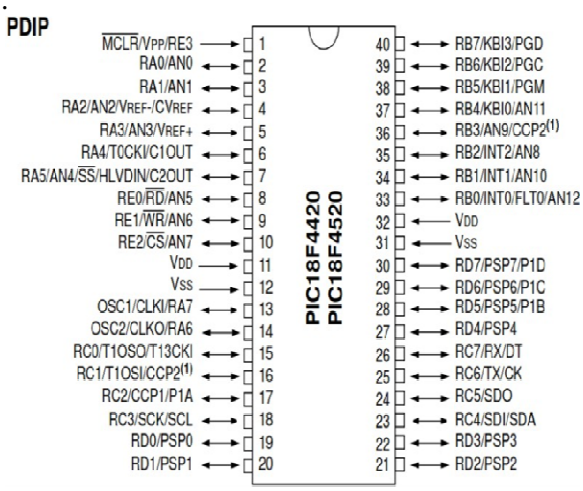


Fig.2 Pin Diagram

### *C. LDR Sensor*

A light dependant resistor also know as a LDR, photoresistor, photoconductor or photocell, is a resistor whose resistance increases or decreases depending on the amount of light intensity. LDRs (Light Dependant Resistors) are a very useful tool in a light/dark circuits. A LDRs can have a variety of resistance and functions. For example it can be used to turn on a light when the LDR is in darkness or to turn o a light when the LDR is in light. It can also work the other way around so when the LDR is in light it turns on the circuit and when it's in

darkness the resistance increase and disrupts the circuit.

The resistance of an LDR may typically have the following resistances Day light = 5000Ω Dark = 20000000 Ω

Fig.3 Light Dependant Resistor Sensor

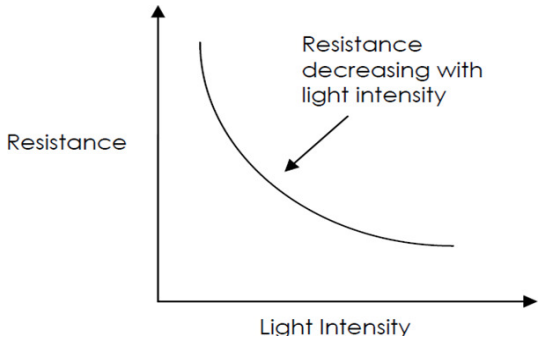


Fig 4. Resistance with Light intensity of LDR Sensor.

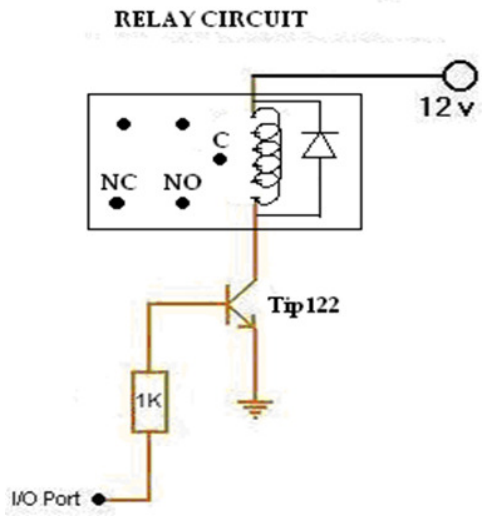


Fig. 5 Relay circuit

### D. Relay and Relay Driver

As explained above, the main component for the construction of LDR is cadmium sulphide (CdS), which is used as the photoconductor and contains no or very few electrons when not illuminated. In the absence of light it is designed to have a high resistance inthe range of megaohms. As soon as light falls on the sensor, the electrons are liberated and the conductivity of the material increases.

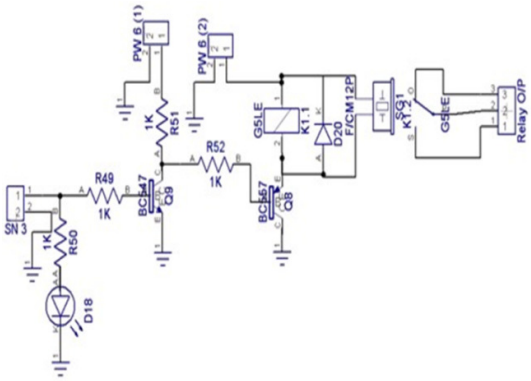


Fig.6 Relay Driver circuit

### E. Signal Conditioning

Signal conditioning can include amplification, filtering, converting, range matching, isolation and any other processes required to make sensor output suitable for processing after conditioning. In other words signal conditioning means manipulating an analog signal in such a way that it meets the requirements of the next stage for further processing. Most common use is in analog-to-digital converters. In control engineering applications, it is common to have a sensing stage (which consists of a sensor), a signal conditioning stage (where usually amplification of the signal is done) and a processing stage (normally carried out by an ADC and a micro-controller). Operational amplifiers (op-amps) are commonly employed to carry out the amplification of the signal in the signal conditioning stage. The speed is measured

using speed sensor. From that using speed value the velocity is calculated. Then it undergoes signal conditioning process like amplification, filtering and other process which are required.

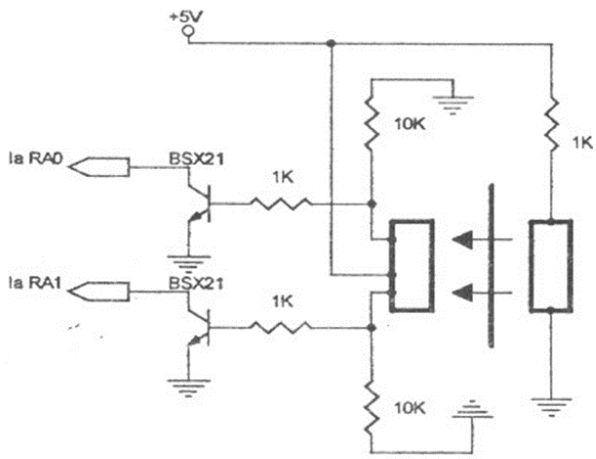


Fig. 7 Signal Conditioning Circuit

### F. Current Transformer

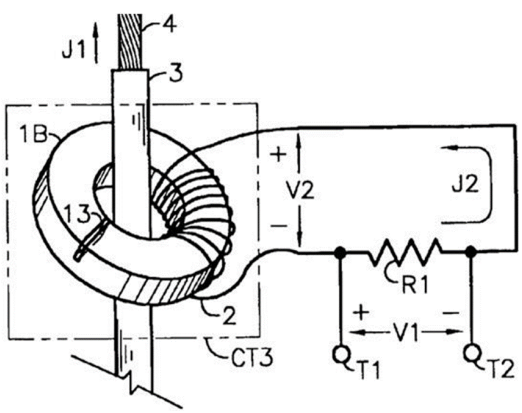


Fig. 8 Current Transformer

In a current transformer (CT) is used for measurement of electric currents. Current transformers, together with voltage transformers (VT) (potential transformers (PT)), are known as instrument transformers. When current in a circuit is too high to directly apply to measuring instruments, a current transformer produces a reduced current accurately proportional to the current in the circuit, which can be conveniently connected to measuring and recording instruments. A current transformer also isolates the measuring instruments from what may be very high voltage in the monitored circuit. Current transformers are commonly used in metering and protective relays in the electrical power industry.

## III. SAFETY PRECAUTIONS

Care must be taken that the secondary of a current transformer is not disconnected from its load while current is flowing in the primary, as the transformer secondary will attempt to continue driving current across the effectively infinite impedance up to its core saturation voltage. This may produce a high voltage across the open secondary into the range of several kilovolts, causing arcing, compromising operator and equipment safety, or permanently affect the accuracy of the transformer.

### G. Accuracy

The accuracy of a CT is directly related to a number of factors including: • Burden • Burden class/saturation class • Rating factor • Load • External electromagnetic fields • Temperature and • Physical configuration. • The selected tap, for multi-ratio CTs For the IEC standard, accuracy classes for various types of measurement are set out in IEC 60044- 1, Classes 0.1, 0.2s, 0.2, 0.5, 0.5s, 1, and 3. The class designation is an approximate measure of the CT's accuracy. The ratio (primary to secondary current) error of a Class 1 CT is 1% at rated current; the ratio error of a Class 0.5 CT is 0.5% or less. Errors in phase are also important especially in power measuring circuits, and each class has an allowable maximum phase error for a specified load impedance

### H. Potential Transformer

Voltage transformers are used for protective-relaying purposes, the "instrument potential transformer," also called simply "potential transformer is a conventional transformer having primary and secondary windings. The primary winding is connected directly to the power circuit either between two phases or between one phase and ground, depending on the rating of the

transformer and on the requirements of the application. Potential Transformer or Voltage Transformer are used in electrical power system for stepping down the system voltage to a safe value which can be fed to low ratings meters and relays. Commercially available relays and meters used for protection and metering, are designed for low voltage. This is a simplest form of potential transformer definition.

## IV. SOFTWARE PROFILE

CCS SOFTWARE A compiler is a computer program (or set of programs) that transforms source code written in a programming language (the source language) into another computer language (the target language, often having a binary form known as object code). The most common reason for wanting to transform source code is to create an executable program. This integrated C development environment gives developers the capability to quickly produce very efficient code from an easily maintainable high level language. The compiler includes built-in functions to access the PIC microcontroller hardware such as READ_ADC to read a value from the A/D converter. Discrete I/O is handled by describing the port characteristics in a PROGRAM. Functions such as INPUT and OUTPUT_HIGH will properly maintain the tristate registers. Variables including structures may be directly mapped to memory such as I/O ports to best represent the hardware structure in C. 5.1.1 CCS COMPILER FEATURES 1. Built in libraries that work with all chips for RS232 serial I/O, I2C, discrete I/O and precision delays. 2. Integrates with MPLAB IDE and other simulators and editors for source level debugging. Standard HEX file and debug files ensure compatibility with all programmers. 3. Formatted printf allows easy formatting and display in HEX or decimal. 4. Efficient function implementation allows call trees deeper than the hardware stack. 5. Source code drivers included for LCD modules, keypads, 24xx and 94xx serial EEPROM's, X10, DS1302 and NJU6355 real time clocks, Dallas touch memory devices, DS2223 and PCF8570 serial SRAM, LTC1298 and PCF8591 A/D converters, temperature sensors, digital pots, I/O expander and much more. 6. Access to hardware features from easy to use C functions, timers, A/D, EEPROM, SSP, PSP, USB, I2C and more. 7. 1, 8, 16 and 32 bit integer types and 32 bit floating point. 8. Assembly code may be inserted anywhere in the source and may reference C variables. 9. Automatic linking handles multiple code pages. 10. Inline functions supported to save stack space; Linker will automatically determine the best architecture or it can be manually specified. 11. Compiler directives determine if tri-state registers are refreshed on every I/O or if the I/O is as fast as possible. 5.2 PROTEUS 7.0 SIMULATION TOOL Proteus 7.0 is a Virtual System Modeling (VSM) that combines circuit simulation, animated components and microprocessor models to co-simulate the complete microcontroller based designs. This is the perfect tool for engineers to test their microcontroller designs before constructing a physical prototype in real time. This program allows users to interact with the design using on-screen indicators and/or LED and LCD displays and, if attached to the PC, switches and buttons. One of the main components of Proteus 7.0 is the Circuit Simulation -- a product that uses a SPICE3f5 analogue simulator kernel combined with an event-driven digital simulator that allow users to utilize any SPICE model by any manufacturer. Proteus VSM comes with extensive debugging features, including breakpoints, single stepping and variable display for a neat design prior to hardware prototyping. In summary, Proteus 7.0 is the program to use when we want to simulate the interaction between software running on a microcontroller and any analog or digital electronic device connected.

## V. CONCLUSIONS

The Awareness of electricity consumption in the home or building is a first step towards saving energy. This system presents a smart energy management system for homes and buildings. The proposed system can monitor and measure electricity usage in real-time. With the proposed

  

system, users can remotely control real-time electrical appliance through mobile devices.

## REFERENCES

[1] X. P. Liu, W. Gueaieb, S. C. Mukhopadhyay, W. Warwick, and Z. Yin, *"Guest editorial introduction to the focused section on wireless mechatronics,"* IEEE /ASME Trans. Mechatronics, vol. 17, no. 3, pp. 397–403, Jun. 2012.

[2] D. S. Ghataoura,J. E. Mitchell, and G. E. Matich, *"Networking and application interface technology for wireless sensor network surveillance and monitoring,"* IEEE Commun. Mag., vol. 49, no. 10, pp. 90–97, Oct. 2011.

[3] P. Cheong, K.-F. Chang, Y.-H. Lai, S.-K. Ho, I.-K. Sou, and K.-W. Tam, "*A zigbee-based wireless sensor network node for ultraviolet detection of flame*," IEEE Trans. Ind. Electron., vol. 58, no. 11, pp. 5271–5277,Nov. 2011.

[4] J. Misic and V. B. Misic, "*Bridge performance in a multitier wireless network for healthcare monitoring*," IEEE Wireless Commun., vol. 17, no. 1, pp. 90–95, Feb. 2010.

[5] M. Erol-Kantarci and H. T. Mouftah, "*Wireless sensor networks for costefficient residential energy management in the smart grid*," IEEE Trans. Smart Grid, vol. 2, no. 2, pp. 314–325, Jun.2011.

[6] *Wireless LAN Medium Access Control (MAC) and Physical Layer (PHY) Specification*, IEEE Std. 802.11, 1997.

[7] I. Kunold, M. Kuller, J. Bauer, and N. Karaoglan, "*A system concept of an energy information system in flats using wireless technologies and smart metering devices*," in Proc. IEEE 6th Int. Conf. Intell. Data Acquisition Adv. Comput. Syst., 2011, pp. 812–816.

[8] Triacs-BT 138 Series, Philips Semiconductors (accessed on 8 Jan.2012).[Online].Available:http://docs-asia.electrocomponents.com/ webdocs/ 0b4b/0900766b80b4bf38.pdf

[9] Triacs-BT 138 Series, Philips Semiconductors (accessed on 8 Jan.2012). [Online]. Available: http://docs-asia.electrocomponents. com/ webdocs/ 0b4b/0900766b80b4bf38.pdf

[10] J. Han, C. S. Choi, and I. Lee, "*More efficient home energy management system based on zigbee communication and infrared remote controls*," IEEE Trans. Consumer Electron., vol. 57, no. 1, pp. 85–89, Feb. 2011.

[11] K. Gill, S. H. Yang, F.Yao, and X. Lu, "*A zigbee-based home automation system*," IEEE Trans. Consumer Electron., vol. 55, no. 2, pp. 422–430, May 2009.

[12] M. S. Pan, L. W. Yeh, Y. A. Chen, Y. H.Lin, and Y. C. Tseng, "*A WSNbased intelligent light control system considering user activities and profiles*," IEEE Sensors J., vol. 8, no. 10, pp. 1710–1721, Oct.2008.

[13] G. Song, Z. Wei, W. Zhang, and A. Song, "*A hybrid sensor network system for home monitoring applications*," IEEE Trans. Consumer Electron., vol. 53, no. 4, pp. 1434–1439, Nov.2007.

[14] C. Suh and Y. B. Ko, "*Design and implementation of intelligent home control systems based on active sensor networks*," IEEE Trans. Consumer Electron., vol. 54, no. 3, pp. 1177–1184, Aug.2008.

[15] ZigBee alliance examining Japan's new smart home recommendations (accessed on 8 Aug., 2012). [Online]. Available: http://www.smartmeters. com/the-news/3449-zigbee-alliance

[16] L. Li, H. Xiaoguang, H. Jian, and H. Ketai, "*Design of new architecture of AMR system in Smart Grid*," in Proc. 6th IEEE Conf. Ind. Electron. Appl., 2011, pp. 2025–2029/

[17] E. Andrey and J. Morelli, "*Design of a smart meter techno-economic model for electric utilities in Ontario*," in Proc. IEEE- Electric Power Energy Conf., 2010, pp. 1–7.

[18] D. Man Han and J. Hyun Lim, "*Smart home energy management system using IEEE 802.15.4 and zigbee*," IEEE Trans. ConsumerElectron., vol. 56, no. 3, pp. 1403–1410, Aug.2010.

[19] V.N. Kamat, "*Enabling an electrical revolution using smart apparent energy meters & tariffs*," in Proc. Annu. IEEE India Conf., 2011, pp. 1–4.

[20] F. Benzi, N. Anglani, E. Bassi, and L. Frosini, "*Electricity smart meters interfacing the households*," IEEE Trans. Ind. Electron., vol. 58, no. 10, pp. 4487–4494, Oct. 2011.

  