RESEARCH ARTICLE OPEN ACCESS

Performance Study of Indirect Evaporative Cooling System Using Desiccant Wheel

Yuvraj M[1], Suhas R[2], Rahul Guda[3], N R Chandra Kiran[4], Dr. N kapilan[5]

[1, 2,3,4,5] Department Of Mechanical Engineering, Nagarjuna College Of Engineering And Technology, Bangalore.

Abstract: -

Evaporative cooling system absorbs water relatively large amount of heat in order to evaporate. Evaporative cooling differs from typical air conditioning systems, which use vapor-compression or absorption refrigeration cycles. Evaporative cooling system is of two type namely (1) direct evaporative cooling system (2) indirect evaporative cooling system. In case of direct evaporative cooling system no heat exchangers used hence there will be less cooling effect compared to indirect evaporative cooling system. in this project desiccant wheel will be added to indirect evaporative cooling system for effective absorption of moisture present in air. Rotary desiccant wheel in the desiccant air conditioning system is used for the dehumidification process of air by absorption of water vapor by the desiccant layer (porous media).

I. INTRODUCTION

Conventional air conditioning systems vapor compression systems have many problems such as high-grade energy consumption rate and the use of HFC's as working fluids cause green house effect and cause ozone layer depletion. in building sector, air conditioning system consume 70%of total energy consumption therefore, attention of many researchers over the world to alternative air conditioning system has become essential due to depleting of energy resources and increasing of environmental pollution. Here evaporative cooling system is incorporated with desiccant wheel. Desiccant cooling technology can be used as an alternative to the conventional vapor compression air conditioning technology to attenuate its drawbacks. Solid and liquid desiccant materials have been used in such systems the former offers many advantages, such as compact design and higher reliability. Many solid desiccants augmented evaporative cooling systems have been reported in the literature. These systems include ventilation nor conventional and regenerative heat exchanger cycles In the ventilation cycle, process air is the

 ©IJSRED: All Rights are Reserved

outdoor air and regeneration air can either be the outdoor air or the conditioned space exhaust air.

EVAPORATIVE COOLING SYSTEM

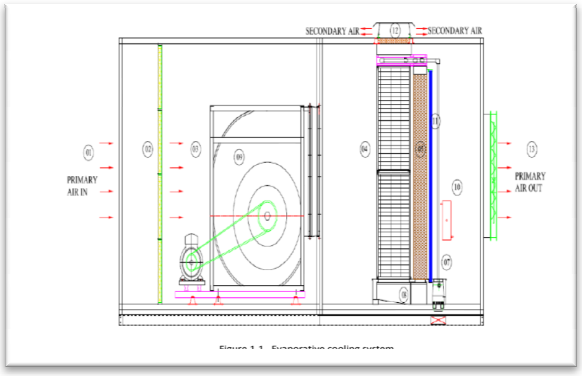

II. Objectives

1) Development of indirect evaporative cooling system using desiccant wheel.
2) Preparation of conventional desiccant wheel using silica gel.
3) Measuring the performance of indirect evaporative cooling system.
4) Improving the cooling efficiency of the indirect evaporative cooling system by reducing the moisture content.

III. Materials and Methodology

Materials

Tank with Heat Exchanger Supports:

Tank is made up of SS 304 sheet, which is leak proof. Provisions are given for water inlet, overflow and drain. Tank is designed in such a way to ensure the complete drain of water in order to avoid water stagnation.

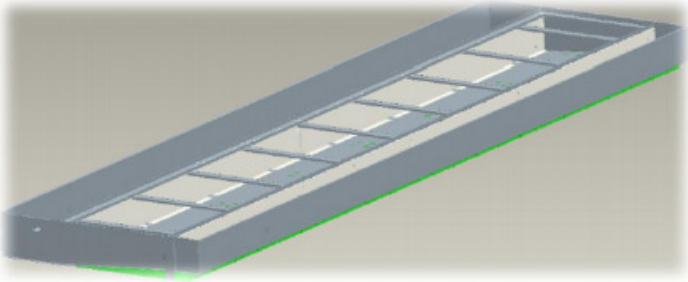

Tank With Heat Exchanger Support

Main Blower

Figure represents the assembled components of main blower and motor. The Blower-Motor is assembled on aluminum blower rails which are assembled in perpendicular directions. The blower is fixed on one set of rails and the motor on second set which is fixed perpendicular to it.

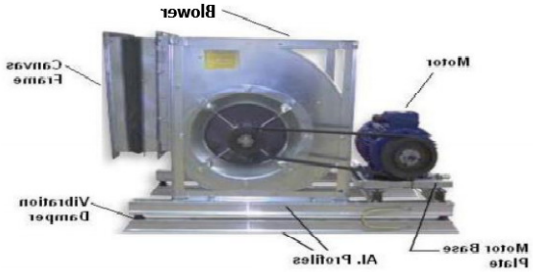

main blower and motor

Heat exchanger I (Adiabatic Heat Exchanger)

Figure represents the process how heat exchanger works. Firstly the air passes through the heat exchanger then that air is cooled where sensible heat exchange will take place and then cooled air is sent to the room as shown in figure. This heat exchanger is a highly efficient evaporative cooling media that is engineered to provide maximum cooling and humidification, low pressure drop and years of reliable service.

 ©IJSRED: All Rights are Reserved

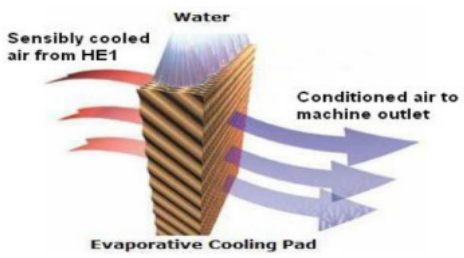

Adiabatic Heat Exchanger

Desiccant Wheel

Figure represents the cross-sectional view of desiccant wheel which consists of rotor which I is driven by a motor A desiccant wheel is very similar to a thermal wheel, but with a coating applied for the sole purpose of dehumidifying, or "drying", the air stream. The desiccant is normally silica gel. As the wheel turns, the desiccant passes alternately through the incoming air, where the moisture is adsorbed, and through a “regenerating” zone, where the desiccant is dried and the moisture expelled.

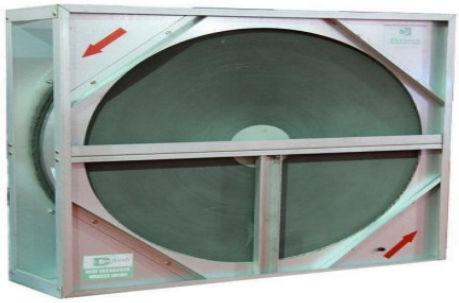

Desiccant Wheel

Mist Eliminator

Figure represents the cross sectional view of mist eliminator. Mist eliminator helps to prevent water from the heat exchanger to be carried into the air stream, which will have adverse effects on indoor air quality and can compromise system operation and maintenance.

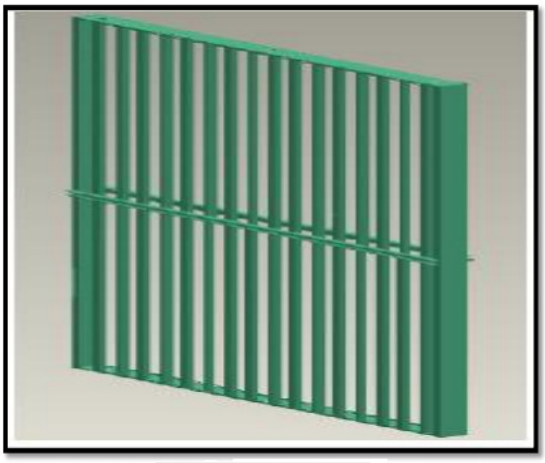

Mist Eliminator

METHODOLOGY

- Problem Identification
- Literature Survey
- Material Procurement
- Fabrication
- Performance Study
- Comparison With IECS
- Cost Analysis

 ©IJSRED: All Rights are Reserved

IV. Experimental Details

Evaporative cooling differs from typical air conditioning system which uses vapour compression or absorption refrigeration cycles. Evaporative cooling uses the fact that water will absorb a relatively large amount of heat in order to evaporate (that is, it has a large enthalpy of vaporization). The temperature of dry air can be dropped significantly through the phase transition of liquid water to water vapour (evaporation). This can cool air using much less energy than refrigeration. In extremely dry climates, evaporative cooling of air has the added benefit of conditioning Evaporative cooling differs from typical air conditioning systems, which use vapour compression air with more moisture for the comfort of building occupants. The cooling potential for evaporative cooling is dependent on the wet-bulb depression, the difference between dry-bulb temperature and wet-bulb temperature (see relative humidity).In arid climates, evaporative cooling can reduce energy consumption and total equipment for conditioning as an alternative to compressor-based cooling. In climates not considered arid, indirect evaporative cooling can still take advantage of the evaporative cooling process without increasing humidity. Passive evaporative cooling strategies can offer the same benefits of mechanical evaporative cooling systems without the complexity of equipment and duct work.

V. Results and Discussions

Indirect Evaporative Cooling System Using Desiccant Wheel Experimental Values

Table represents the experimental values of an **indirect evaporating cooling system using desiccant wheel**. In this tabular column we have calculate overall efficiency using suitable formula.

Sl. No	Ø1	Ø2	ΔØ	W1	W2	ΔW	ΔTDry	ΔTWet	η(%)
1	54	64	10	0.0135	0.012	0.001	5	3	80
2	59	65	6	0.0125	0.0135	0.001	4	1	66.6
3	56	52	2	0.0135	0.0135	0.015	3.5	3	60

Sl no	T Dry (˚C)	T Wet (˚C)	T Dry (˚C)	T Wet (˚C)	Velocity
1	26	22	21	19	4.3
2	27	21	23	20	4.1
3	28	22	24.5	19	3.9

Indirect Evaporative Cooling System Using Desiccant Wheel Graph

Graph indicates the graph temperature v/s relative humidity. This graph indicates the difference in relative humidity decrease with increase in inlet temperature.

 ©IJSRED: All Rights are Reserved

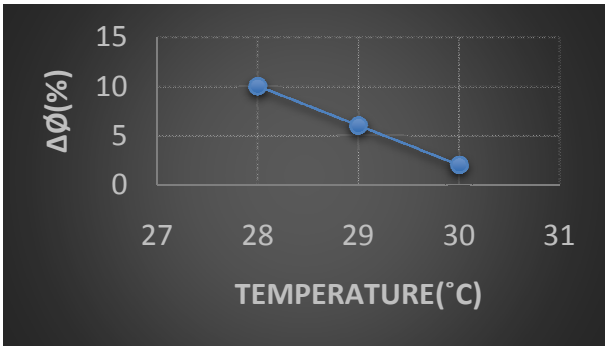

Graph indicates the graph temperature v/s change in specific humidity. This indicates that change in specific humidity remains same with increase in inlet temperature.

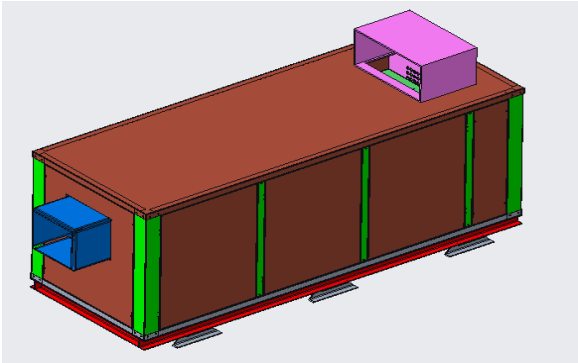

Outer View of IECS

CAD MODELS

3D MODEL OF IECS WITHOUT USING DESICCANT WHEEL

The below cad models represent of indirect evaporative cooling system without using desiccant wheel. This figure consists of blower, cellulose pads, tank and motor as shown in figure.

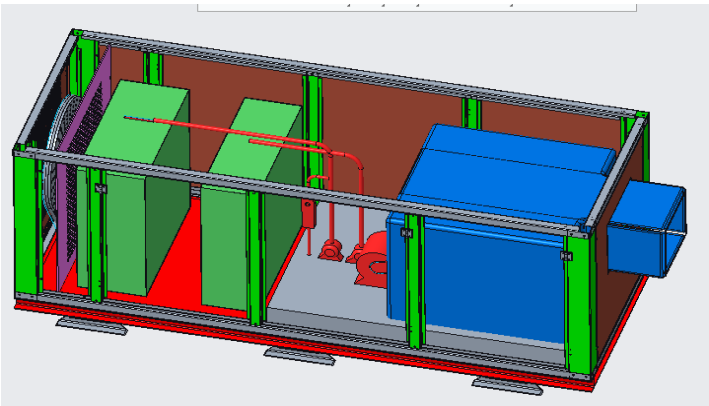

IECS Using Desiccant Wheel

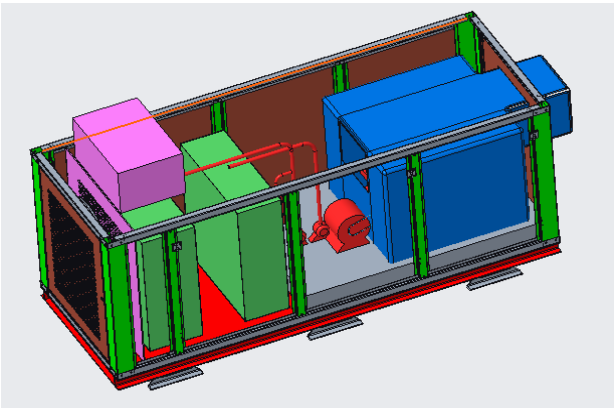

IECS Without Desiccant wheel

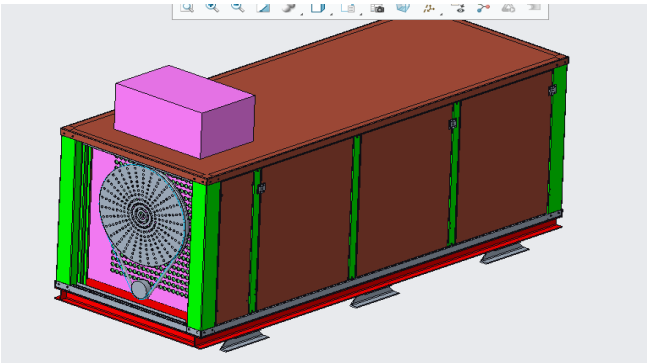

3D IECS Side View Showing Desiccant Wheel

 ©IJSRED: All Rights are Reserved

VI. Conclusion

Performance of the desiccant wheel bases air conditioning system is evaluated conclusion is made. For a chosen temperature air conditioning system is economically up to certain humidity level compared to window air condition alone. Then cooling efficiency of indirect evaporative cooling system is increased with the addition of desiccant wheel from 70% to 80%.

VII. References

1. Pietruschka et al., 2006; Ge et al., 2009[1] evaluate the performance of a novel two-stage rotary desiccant cooling (TSRDC) system and to obtain useful data and experiences for practical application

2. Heidarinejad and Pasdarshahri (2010)[2] The objective of this model is to evaluate performance of ventilation, recirculation, makeup, and mix cycles of desiccant evaporative cooling systems.

3. Bourdoukan et al. (2010)[3] Influence of climatic conditions, the effectiveness of desiccant wheel and sensible regenerator on supply conditions for conventional and recirculation cycles.

4. Kanoglu et al. (2007)[4] Thermal COP of ventilation and recirculation cycles based on indoor and outdoor ARI (American refrigeration institute) conditions.

5. La et al. (2013)[5] Effects of individual irreversible processes in each component on thermodynamic performance of open desiccant cooling cycles were studied.

6. Dunkle (Dunkle, 1975)[6] studied about regenerative heat exchanger cycles

7. (Maclaine-Cross, 1985; Kang and Maclaine-cross, 1989)[7]. Analyzed about the ventilation cycle, process air is the outdoor air and regeneration air can either be the outdoor air or the conditioned space exhaust air.

 ©IJSRED: All Rights are Reserved