RESEARCH ARTICLE OPEN ACCESS

Simulation of Variable Speed Induction Machine Wind Generation System Using Fuzzy Logic Controller (FLC)

Kommalapudi Srihari[1], C.Dinakaran[2]

[1]UG Student, Department of Electrical and Electronics Engineering, Audisankara College of Engineering & Technology, Gudur, A.P, India

[2]Assistant Professor, Department of Electrical and Electronics Engineering, Audisankara College of Engineering & Technology, Gudur, A.P, India

Email: dina4karan@gmail.com

----------**********----------

Abstract:

The worldwide electrical power utilization is increasing moreover there is stable enlarge of the demand on energy generation. The presented conservative power sources are depleting. The substitute power source reserves are appropriate further significant at the present day. Wind electrical production systems are newly receiving lot of concentration, for the reason that they are the majority charge spirited, ecological clean as well as secure renewable energy source. Artificial intelligence system such as fuzzy logic, neural networks as well as genetic algorithms are recently performance a lot of assure in the function of power electronic systems. The most important intention of this paper is to propose with analyse the routine of a model 5KW unpredictable speed wind generation arrangement with fuzzy logic controllers used for optimizing effectiveness furthermore improve the routine of the method. The production system uses three Fuzzy Logic Controllers FLC-1, FLC-2 as well as FLC-3. The FLC-1 tracks the generator speed through the wind velocity in the direction of extort utmost power identified as producer speed tracking regulator. The FLC-2 programs engine flux for illumination load effectiveness development known as Generator flux programming controller. The FLC-3 provides vigorous speed control against wind current with turbine oscillatory torque recognized as closed loop generator speed regulator. The fuzzy logic based control of the arrangement helps to optimize effectiveness as well as improve performance of the arrangement is demonstrated by simulation via MATLAB/SIMULINK.

Keywords — Fuzzy Logic Control, Variable Speed Squirrel Cage Induction Machine, Wind Generator, MATLAB 8.2 Software.

----------**********----------

I. INTRODUCTION

Electrical power utilization is increasing day by day furthermore there is stable augment of the demand on energy generation. The obtainable conservative energy sources are diminishing [1]. Consequently substitute power source reserves are fetching further significant at the present days [2]. Wind power generation systems are recently receiving assortment of concentration, since they are the majority charge aggressive, ecological spotless with secure renewable energy source, because compared to fossil fuel moreover nuclear energy generation [3]. The exhaustion assets, raise in insist moreover definite factors in globe policy comprise collectively contributed to a quick rise in the charge of conventional energy generation [4].

A lot of places as well accomplish not contain the potential for generating hydro power. Nuclear energy generation is previously treated by means of immense optimism, however by the acquaintance of

the ecological hazards related through the achievable outflow from nuclear power plants, the majority countries comprise resolute not to establish them to any further extent [5]. The increasing attentiveness of these troubles leads to discriminating investigate efforts meant for increasing unconventional sources of power for generation of electrical energy [6]. The majority attractive resource would be individual so as to be non pollutant presented in plenty with renewable as well as be able to be harness on a tolerable price in mutually huge level along with miniature extent system [7]. The majority capable source agreeable all these necessities is wind [8].

II. POWER FROM THE WIND

Kinetic power commencing the wind is used to turn the generator within the wind turbine toward generates electrical energy. There are a number of factors with the aim of supply to the effectiveness of the wind turbine in extract the power commencing the wind. Initially, the wind speed is individual of the significant factor in decisive how greatly power is able to be extract commencing the wind. This is for the reason that the energy generated from the wind turbine is a purpose of the cube of the wind speed. Therefore, the wind speed if double the energy produced will be improved by eight times the innovative power. Subsequently, locality of the wind farm plays a vital role in arrange for the wind turbine to take out the majority available energy form the wind.

The subsequently significant aspect of the wind turbine is the rotor blade. The rotor blades span of the wind turbine is one of the essential aspects of the wind turbine while the energy generated commencing the wind is too relative to the swept area of the rotor blades i.e. the square of the diameter of the swept area.

Because the blade span increases these character of the rotor blades develop into supplementary elusive. Although in the midst of the current advances in fibre glass along with carbon fibre skill. The creation of lightweight with strong rotor blades among 20 to 30 meters extensive is achievable. Wind turbines through the dimension of these rotor blades are able to generate up to 1 MW of power.

III. INDUCTION GENERATOR FOR WIND GENERATION SYSTEM

Induction generator is normally used into the wind turbine electric power generation suitable to its condensed unit charge, brushless rotor creation, ruggedness moreover simplicity of preservation. Furthermore, induction generators contain a number of uniqueness in excess of the synchronous generator. The speed of the asynchronous generator resolve fluctuates according to the rotating force functional to it.

A functional mechanical belonging of the generator is to facilitate it resolve amplify or diminish its speed to some extent if the torque varies also consequently will be less destroy as well as carry on the gearbox within the system. This is one of the significant reasons to employ asynchronous generator compared to a synchronous generator taking place a wind turbine.

An Induction generator is a kind of electrical power generator with the intention of mechanically as well as electrically related to a polyphase induction motor. Induction generators create electrical power while their shaft is rotated quicker than the synchronous frequency of the comparable induction motor.

Induction generators are frequently used in wind turbines furthermore in a few micro hydro installations suitable to their capability to generate practical power at unstable rotor speeds. Induction generators are mechanically as well as electrically simpler than additional generator types. They are also more rugged, requiring no brushes or commutators.

IV. FUZZT LOGIC

Fuzzy logic is a structure of multi valued logic derivative commencing fuzzy set theory to arrangement with interpretation with the intention of estimated relatively than precise. In dissimilarity with "crisp logic", wherever binary sets contain binary logic, fuzzy logic variables could encompass a truth value that ranges between 0 and 1 and is not controlled to the two truth values of typical propositional logic. Moreover, when linguistic

variables are used these degrees might be managed by definite functions. Fuzzy logic emerges as a significance of the 1965 application of fuzzy set theory by Lotfi Zadeh. However fuzzy logic have been functional to many fields, beginning control theory to artificial intelligence it still residue contentious between the majority statisticians, who prefer Bayesian logic along with some control engineers have a preference conventional two valued logic.

V. CONVERTER SYSTEM

A vertical wind turbine is attached to the shaft of a squirrel cage induction generator during a speedup gear ratio. The variable frequency variable voltage power commencing the generator is rectified by a Pulse Width Modulation insulated gate bipolar transistor rectifier.

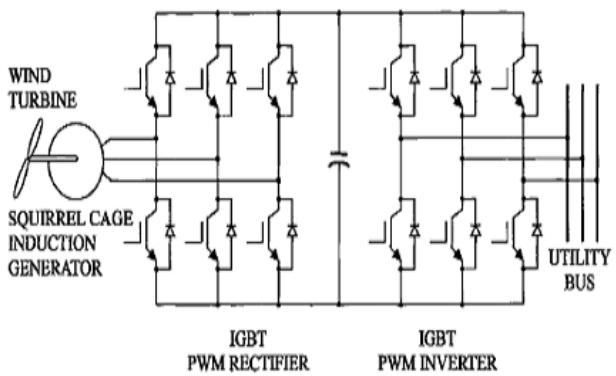

Fig. 1 Voltage fed converter system

The rectifier as well supplies the excitation necessitate of the machine. The inverter topology is the same to that of the rectifier with it equipment the generated power at 60 Hz to the utility grid as illustrated in figure 1.

It appears to facilitate fuzzy logic based intellectual control is the majority for performance development of wind generation systems. The machine as well as inverter output currents are sinusoidal. The machine absorbs lagging reactive current except it is constantly zero on the line side i.e., the line power factor is unity.

The rectifier uses indirect vector control during the inner current control loop, while the direct vector control method is used in favour of the inverter current controller. Vector control permits rapid transient response of the system. For a exacting wind velocity, there resolve be an optimum setting of generator speed. The speed loop will produce the torque constituent of machine current so as to equilibrium the developed torque through the load torque.

The variable voltage and variable frequency power from the tremendous synchronous induction generator will be rectified along with pumped to the DC link. The DC link voltage controller resolve regulate the line power consequently to facilitate the relation voltage constantly remains constant. A feed forward energy signal commencing the machine output to the DC voltage loop prevents transient oscillation of link voltage. Obviously the system is able to be adequately controlled for start up with regenerative braking in power cut modes moreover the natural generating model of process.

VI. FUZZY LOGIC CONTROLLERS IN WIND GENERATION SYSTEM

Figure 2 illustrates a block diagram of the power circuit as well as the fuzzy logic based control of the wind generation system. The wind turbine is attached to the squirrel cage type induction generator through a speed up gear box.

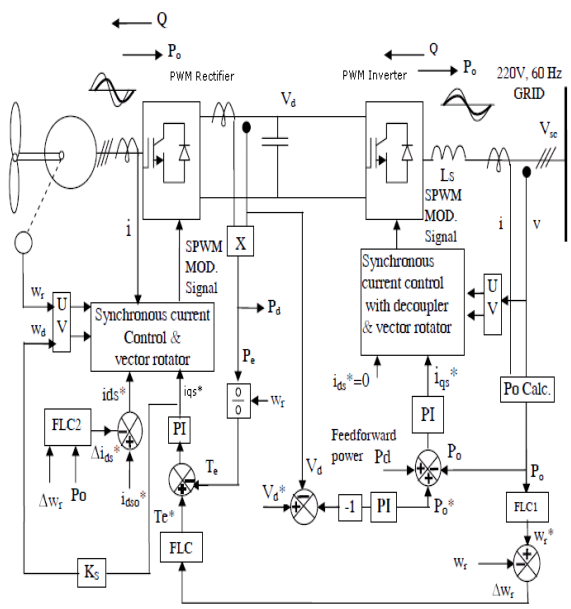

Fig.2 Fuzzy logic controllers in wind generation system

The variable frequency and variable voltage power generated through the machine is rectified to

direct current by an Insulated Gate Bipolar Transistor Pulse Width Modulation bridge rectifier to facilitate supplies lagging excitation current to the machine. The DC link power is inverted to 60Hz, 220V alternating current through an Insulated Gate Bipolar Transistor Pulse Width Modulation inverter in addition to fed a utility grid. Together the line as well as machine currents are sinusoidal as represented in output waveforms. The line side power factor is maintained at unity while it can be programmed to be leading or lagging. The generated power usually flows commencing the machine to the line. Though, energy can also flow in the opposite direction meant for the start up of a vertical turbine. Because the speed of the mechanism builds up it goes into a generating mode.

The machine is shut down by regenerative braking. The generator speed is controlled by indirect vector control with torque control as well as synchronous current control in the inner loops. The machine flux is controlled in open loop by control of i_{ds} current. However in standard condition the rotor flux is set to the rated value for fast transient response. The line side converter is moreover vector controlled with direct vector control as well as synchronous current control in the inner loops. Output power is controlled to regulate the DC link voltage. Because an increase of output power decreases the link voltage, the loop error polarities have been inverted. The regulation of V_d contained by a little tolerance band requires a feed forward energy injection in the power loop as indicated. The system uses three fuzzy controllers are FLC-1, FLC- 2 as well as FLC-3.

VII. SIMULATION RESULTS & DISCUSSION

The proposed system has been tested along with simulation results are exposed from figure 3 to figure 20. This representation has been implemented with MATLAB / SIMULINK environment with SIMPOWER system toolbox.

A. SIMULINK MODEL OF WGS WITHOUT FUZZY LOGIC CONTROLLERS

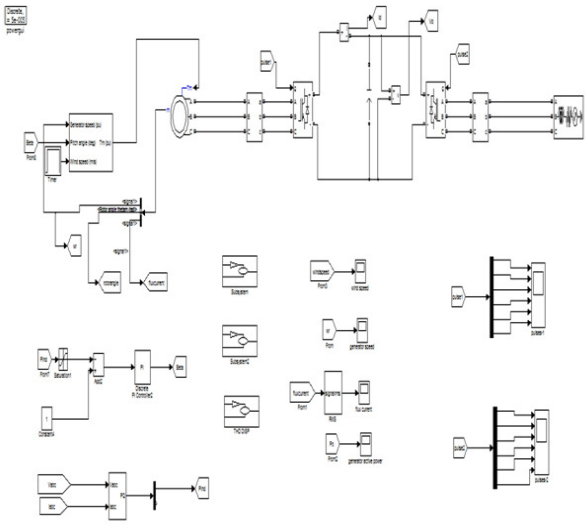

Fig. 3 SIMULINK model of WGS without fuzzy logic controllers

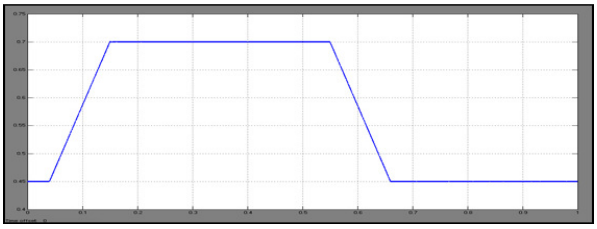

Fig. 4 Wind velocity (PU) – time (Sec)

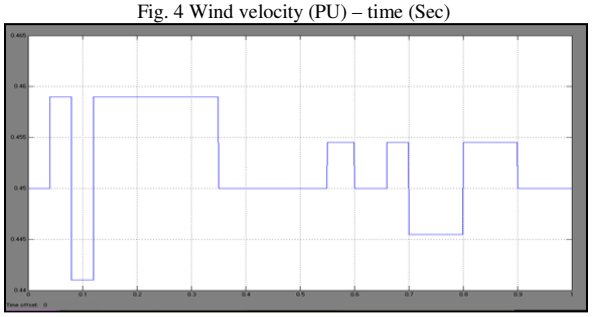

Fig. 5 Generator speed (PU) – time (Sec)

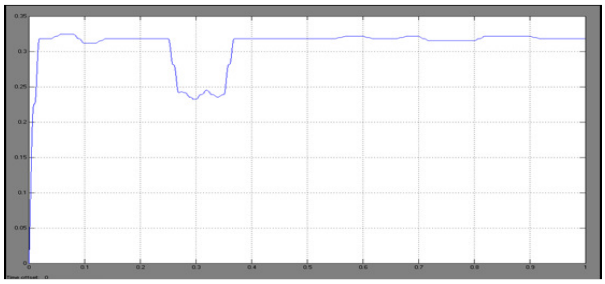

Fig. 6 Flux current (PU) – time (Sec)

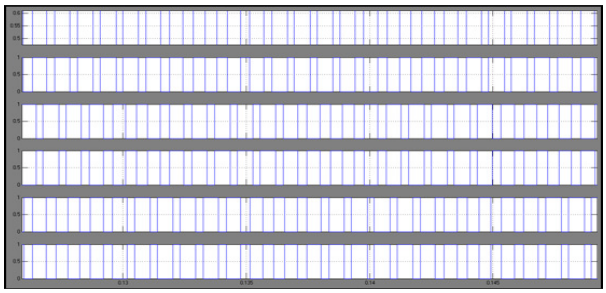

Fig. 7 Gating Pulses for Converter-1

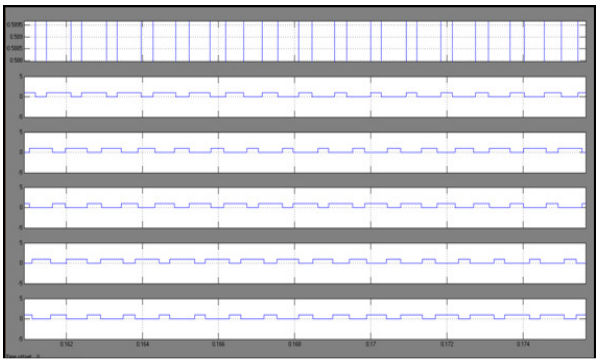

Fig. 8 Gating Pulses for Converter-2

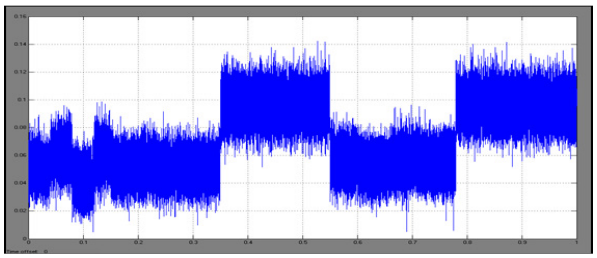

Fig. 9 Output power (PU) – time (Sec)

B. SIMULINK MODEL OF WGS WITH FUZZY LOGIC CONTROLLERS

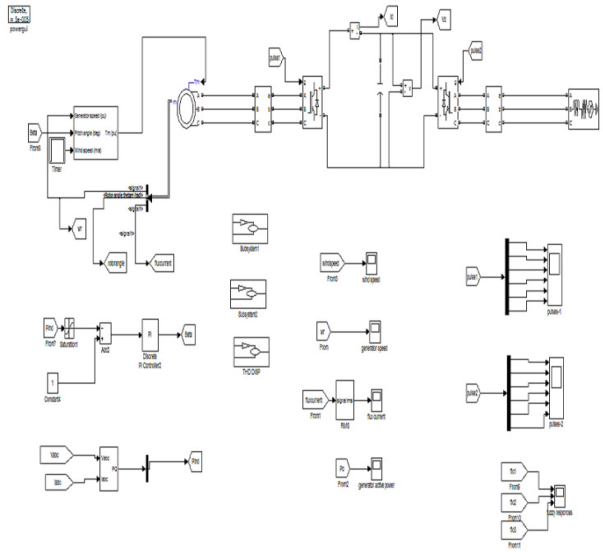

Fig. 10 SIMULINK model of WGS with fuzzy logic controllers

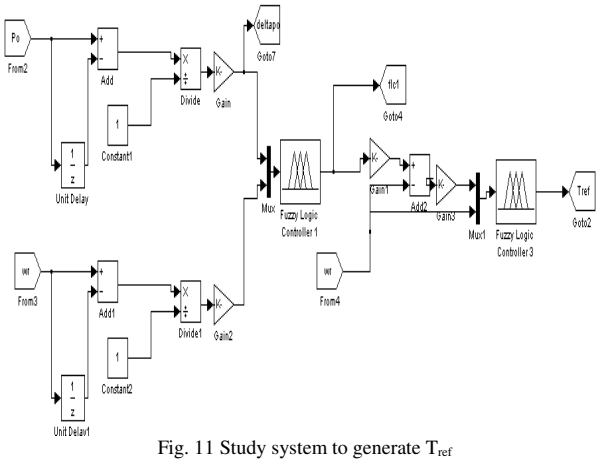

Fig. 11 Study system to generate T_{ref}

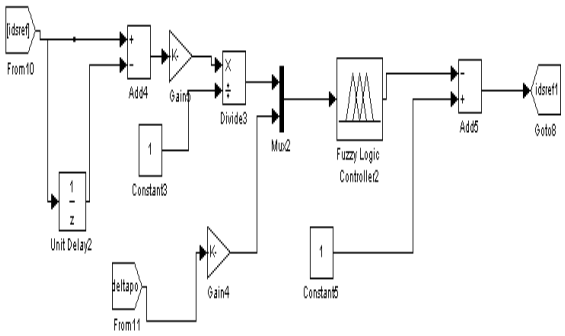

Fig. 12 Study system to generate i_{dsref1}

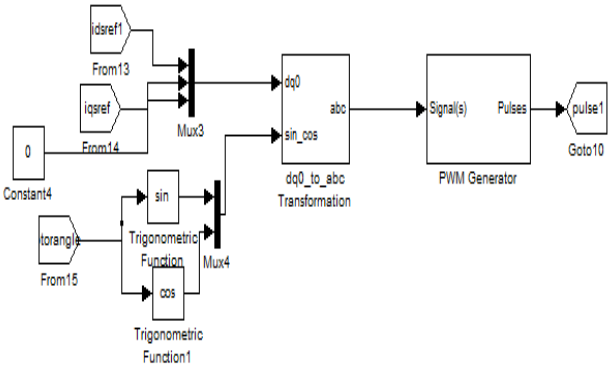

Fig. 13 Study system to generate pulse 1

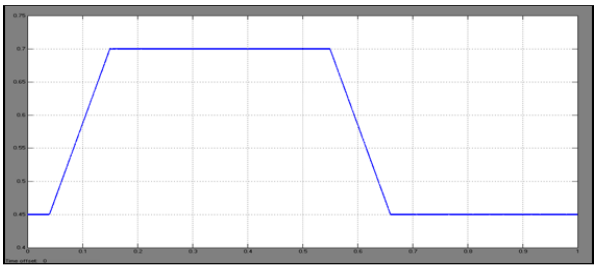

Fig. 14 Wind velocity (PU) – time (Sec)

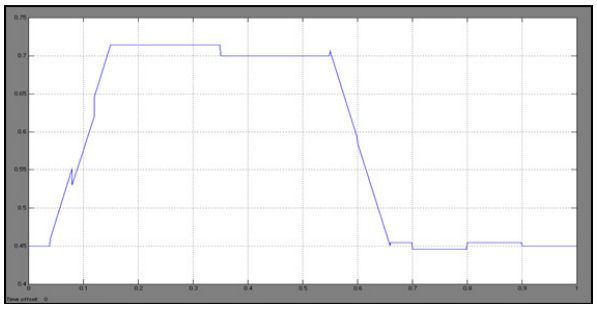

Fig. 15 Generator speed (PU) – time (Sec)

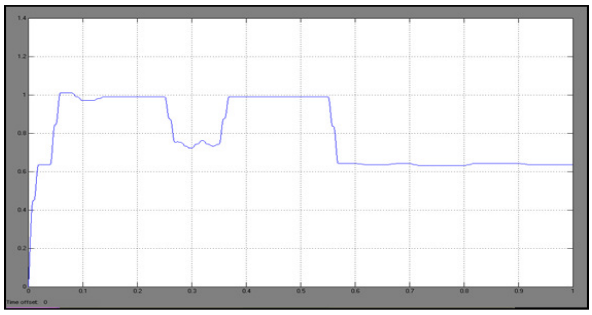

Fig. 16 Flux current (PU) – time (Sec)

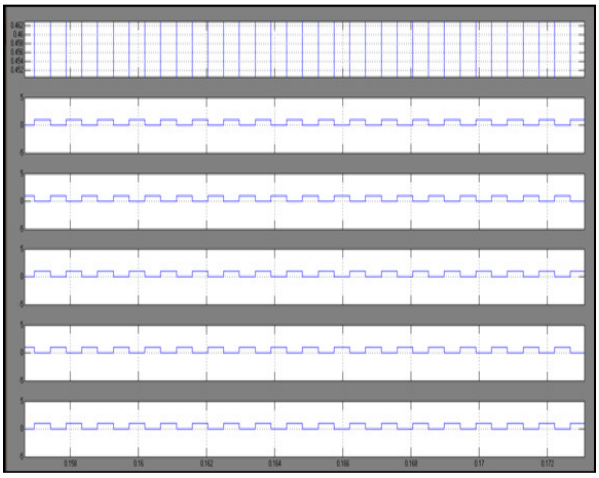

Fig. 17 Gating pulses for converter-1

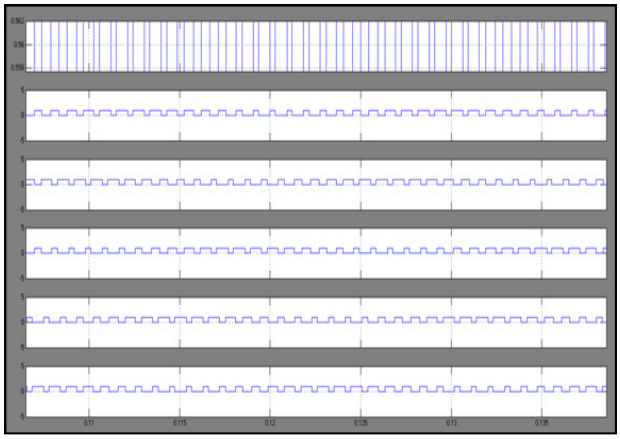

Fig. 18 Gating pulses for converter-2

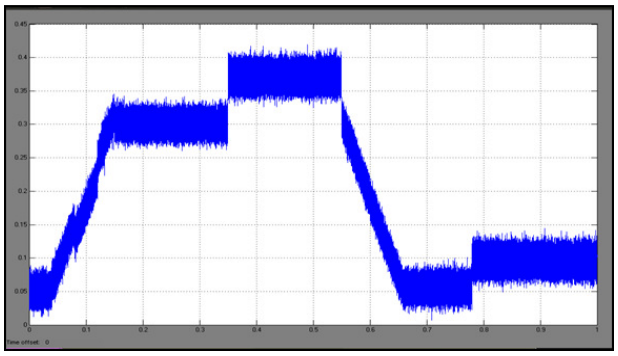

Fig. 19 Output power (pu) – time (sec)

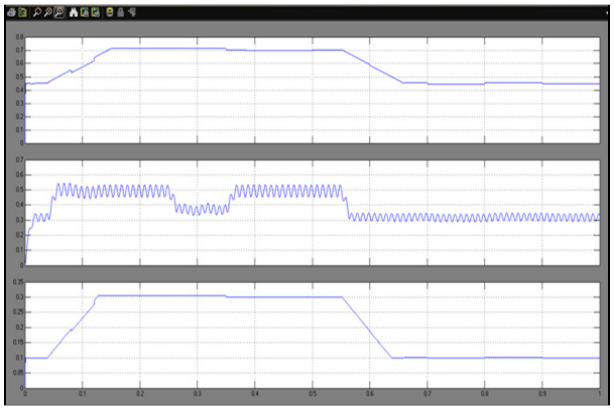

Fig. 20 Fuzzy Output FLC-1, FLC-2, FLC-3

VIII. CONCLUSION

A model of fuzzy logic based 5KW variable speed wind power generation system have been designed along with performance have been considered through MATLAB simulation. The wind energy generation system uses three fuzzy logic controllers FLC-1, FLC-2 moreover FLC-3.

The majority promising applications are those wherever conventional control systems cannot supply adequate performance, normally while the representation of the generating plant is not obtainable or extremely non-linear. While the method is issue to important constraint variation. Fuzzy Logic Controller constitutes a controlling tool to convert creature practiced information addicted to automatic control strategy.

The FLC-1 tracks the generator speed through the wind velocity to extract maximum power recognized as Generator speed tracking controller. The FLC-2 programs machine flux for light load effectiveness enhancement recognized as Generator flux programming controller. The FLC-3 provides robust speed control adjacent to wind vortex and

turbine oscillatory torque recognized as closed loop generator speed controller.

REFERENCES

[1] K. Kaur, Dr.S.Chowdhury, Dr.S.P.Chowdhury, Dr. K.B.Mohanty, Prof.A.Domijan,"Fuzzy logic based control of variable speed induction machine wind generation system" IEEE transactions on Industry Applications,(2008) pp 1-11.

[2] Bose, B.K. Modern power electronics and A.C drives .Upper saddle river: Pearson Education, 2002.

[3] Simoes, M. G., Bose, B. K., Spiegel, R.J. "Design and performance evaluation of fuzzy logic based variable speed wind generation system", IEEE Transactions on Industry Applications. Vol. 33, No. 4, (July/august 1997), pp. 956-965.

[4] Bose, B. K., Simoes , M . G. "Project Summary – Fuzzy logic based intelligent control of variable speed cage wind generation system". United States environmental Protection Agency, (March 1997): pp. 1-6.

[5] Zhao, Jin. , Bose, B.K. "Evaluation of membership functions for fuzzy logic controlled induction motor drive", IEEE Transactions on Power Electronics, (2002), pp. 229-234.

[6] Zhao, Jin, Bose, B.K. "Membership function distribution effect on fuzzy logic controlled induction motor drive", IEEE Transactions on Power Electronics, (2003), pp. 214-219.

[7] C.Dinakaran, "Temperature and Water Level Control in Boiler by using Fuzzy Logic Controller," International Journal of Electrical Power System and Technology, Vol. 1, Issue 1, October 2015, PP. 27-37.

[8] C.Dinakaran, "Evaluation of Fault Diagnostic System for a Multistring Multilevel Inverter using an Artificial Neural Network," International Electrical Engineering Journal, Vol. 6, No. 4, May 2015, PP. 1850-1855.

